Automatic Dependent Surveillance for Rotorcraft Operations in a Low Altitude, Non-Radar Environment

Final Report

July 9, 1999

Prepared for

The National Aeronautics and Space Administration
Advanced Air Transportation Technologies Project
NASA Ames Research Center
Moffett Field, California 94035-1000

Prepared by

Edwin D. McConkey
Eric H. Bolz

Science Applications International Corporation
Air Transportation Systems Operation
Arlington, Virginia

Under Contract Number NAS2-98002
Task Order 18

and

Richard P. Stead

ARINC Incorporated
Annapolis, Maryland

Under Subcontract Number 4600001363

TABLE OF CONTENTS

1.0 Introduction 1
1.1 Program Objectives and Scope 1
1.2 Research Approach 2
1.3 Overview of ADS System Concepts 3
1.4 Overview of the Development Status of ADS 4
1.5 Relationship of ADS and Free Flight 5
2.0 Gulf of Mexico Operational Environment 7
2.1 Air Traffic Management in the Gulf of Mexico 7
2.2 Helicopter Operations in the Gulf of Mexico 7
2.3 Midair Collision Accident History in the Gulf of Mexico 10
2.4 User and Service Provider Benefits in the Gulf of Mexico 12
2.4.1 ADS-A Benefits 12
2.4.2 ADS-B Benefits 13
2.4.3 Combined ADS-A and ADS-B Benefits 13
3.0 ADS-A System Development 15
3.1 Standards Development 15
3.2 Multiple Standards 15
3.3 Message Integrity 16
3.4 ADS-A Implementations 16
4.0 ADS-A System Architecture 19
4.1 Current ADS-A Technologies and Implementation 19
4.2 Norwegian CAA ADS-A Activities 20
4.2.1 Overview of North Sea Helicopter Operations 21
4.2.2 System Requirements 21
4.3 M-ADS Architecture 22
4.4 M-ADS Program Results 22
4.5 M-ADS Operational Implementation 23
4.5.1 M-ADS Operational Use Criteria 24
4.5.2 Airspace Structure 24
4.5.3 M-ADS Procedures 25
4.5.4 Training 25
4.5.5 Supplement to the Report 25
4.5.6 Implementation Schedule 25
5.0 ADS-A Operational Acceptability 27
5.1 New Technology Considerations 27
5.2 Joint Industry/FAA Activities 28
5.3 Certification 28
5.4 Transition Considerations 30
5.5 ADS-A Avionics Considerations 34
5.6 Other Considerations 35

6.0 ADS-B System Concept 37
6.1 Overview of Development of ADS-B 37
6.1.1 MIT Lincoln Laboratories 37
6.1.2 The 1996 Olympic Games – ARNAV Systems 38
6.1.3 FAA's Safe Flight 21 Program 39
6.1.3.1 Ohio Valley Tests – Cargo Airline Association 40
6.1.3.2 Capstone Program – FAA Alaska Region 41
6.1.4 European ADS-B Programs – NEAN, NAAN, NEAP, and NUP 43
6.1.5 RTCA SC-186 43
6.2 ADS-B Avionics Requirements for Air-to-Air Operations 44
6.2.1 RRADS Functional Requirements 45
6.2.2 RRADS Physical Requirements 45
6.2.3 RRADS Certification Requirements 46
6.2.4 RRADS Procurement Requirements 46
6.3 RRADS Requirements from RTCA ADS-B MASPS 46
6.4 Other RRADS Applications 47
7.0 RRADS System Architecture 49
7.1 Candidate RRADS Architecture 50
7.2 RRADS System Components 53
7.2.1 GPS Receiver System Components 53
7.2.2 Mode S Transponder Subsystem 54
7.2.3 1090 MHz Downlink Receiver Subsystem 55
7.2.4 Pentium Processor and Display Subsystem 58
7.3 Recommended RRADS Component List 58
8.0 Avionics Integration 59
8.1 Functional Integration of Avionics 59
8.1.1 Character of the Aircraft Environment 60
8.1.2 Air-to-Air Avionics Integration 62
8.2 Avionics Systems Acceptance Test Procedures 65
8.2.1 Component and Subsystem Bench Tests 65
8.2.2 Installed Equipment Ramp Test Procedures 67
9.0 Conclusions 69
10.0 Recommendations 71

References 73

Appendix A – Acronyms 75
Appendix B – Bibliography 81
Appendix C – GPS Receiver Outputs 91
Appendix D – M-ADS Technical Description 95
Appendix E – FireFlight II Technical Description 103

LIST OF FIGURES

Figure 5-1 Gateway Accommodates Multiple Air/Ground Networks 30
Figure 5-2 ADS Gateway Functionality Provides Flexible Interface to Host Computer 32
Figure 5-3 ARINC CNS/ATM Gateway Functional Structure 32
Figure 7-1 Rotorcraft ADS-B Aircraft Architecture 51
Figure D-1 M-ADS Airborne Equipment 97
Figure D-2 AMSS Data Communications Model 99
Figure D-3 M-ADS Communication Protocols (Airborne Segment) 100
Figure E-1 The FireFlight II System 103
Figure E-2 An Open FireFlight II Computer Chassis 105
Figure E-3 The Back Side of the FireFlight II Computer Chassis 105
Figure E-4 The 6.4-inch (Diagonal) Panel-Mounted Display Used for the FireFlight II System during a Flight Test 107
Figure E-5 The Portable, Thin, Lightweight Display for the FireFlight II System 108

LIST OF TABLES

Table 2-1 Gulf of Mexico Offshore Helicopter Fleet and Operations Summary 9
Table 2-2 Gulf of Mexico Offshore Helicopter Hours and Operations by Helicopter Type 9
Table 2-3 Gulf of Mexico Offshore Helicopter Operations – Averages per Helicopter 9
Table 7-1 Survey of GPS Receivers 54
Table D-1 ADS-A Message Groups 96
Table D-2 Key ADS-A Unit Parameters 98
Table D-3 Key Parameters for the SDU and HPA 98
Table D-4 Key Parameters for the LNA/Diplexer 99
Table D-5 Key Parameters for the Low Gain Antenna 99
Table E-1 Hardware Configuration for the Current FireFlight II System 104
Table E-2 Properties of the Rugged, Portable Display for the FireFlight II System 106
Table E-3 Properties of the Digital Radio Modem Transceiver for the FireFlight II System ... 109
Table E-4 Properties of the GPS Receiver for the FireFlight II System 109

1.0 INTRODUCTION

The work described in this report was performed for the National Aeronautics and Space Administration (NASA), Ames Research Center (ARC), Moffett Field, California by Science Applications International Corporation (SAIC), Air Transportation Systems Operation (ATSO), Arlington, Virginia under Contract Number NAS2-98002, Task Order 18. This contract supports NASA's Advanced Air Transportation Technologies Project (AATT), which addresses NASA's Pillars and Goals in Aeronautics and Space Transportation Technology. SAIC was supported in this effort by ARINC Incorporated of Annapolis, Maryland under subcontract 4600001363.

1.1 Program Objectives and Scope

The objective of this effort is to assist NASA in developing a research capability to address the use of automatic dependent surveillance (ADS) for rotorcraft in a low altitude, non-radar environment. In these operational areas, rotorcraft are not supported by conventional National Airspace System (NAS) communication, navigation and surveillance (CNS) facilities. New technology developments in navigation (the Global Position System (GPS)) and communication (terrestrial and satellite digital communications networks) now permit innovative, alternative solutions to rotorcraft safety and infrastructure issues. Integration of navigation and communications technology in an ADS framework allows: 1) air-to-air capability that increases the pilot's awareness of other traffic for greater safety, and 2) air-to-ground capability as an alternative to radar for the NAS surveillance function.

The terminology used for ADS concepts can be quite confusing. In this report, we use the terms ADS to refer to the general concept of automatic dependent surveillance. We use the terms ADS-A (A for addressable) and ADS-B (B for broadcast) to refer to two different ADS concepts. ADS-A refers to an addressable version of ADS whereby the ground and airborne units negotiate and establish specific rules or protocols for communicating with each other. This negotiated relationship is also called ADS-C (C for contract) by some persons in the aviation community. ADS-B refers to the concept whereby the airborne units broadcast their messages at intervals that are controlled by the airborne unit itself. No prior rules, contracts or other negotiated agreements with another aircraft or ground facility are used by ADS-B. It should be noted that many authors use the terminology ADS for the addressable form of ADS, which is called ADS-A in this report.

There are operational, procedural and regulatory issues associated with introduction of ADS capability into rotorcraft operations. Through the efforts of this task order, NASA seeks to define and develop a research capability whereby these issues can be addressed in an airborne environment. The principal objectives of this task order were to assist NASA in developing a flight research capability to address the use of ADS for rotorcraft utilizing:

- ADS-B in an air-to-air mode to support enhanced threat awareness of other aircraft operating in the area. This application supports see-and-be-seen rules for traffic separation during Visual Flight Rules (VFR) operations.
- ADS-A in an air-to-ground mode to support improved surveillance for air traffic management (ATM). This application supports enhanced surveillance by ground control facilities and has potential for reducing traffic separation during Instrument Flight Rules (IFR) operations.

The scope of this effort involved: 1) establishing the operational requirements for rotorcraft ADS-A and ADS-B applications, and 2) determining the technical feasibility of developing a NASA flight research capability employing ADS-A and ADS-B system elements. The scope includes developing recommendations for specific airborne architectures to support the flight research capability.

1.2 Research Approach

The research approach sought to first determine the current status of ADS and ADS-B activities in both the United States and elsewhere in the world. This activity involved:

- Literature searches,
- Internet searches,
- Involvement in national aeronautical committees (RTCA and the International Civil Aviation Organization (ICAO)),
- Contacts with civil aviation authorities (CAA's) that have ongoing ADS-A and ADS-B Projects and programs,
- Contacts with rotorcraft operational organizations and rotorcraft operators, and
- Contacts with avionics suppliers.

This effort brought the research team to a general level of understanding of the status and future directions of ADS-A and ADS-B activities throughout the world.

The research team then sought to understand the requirements of rotorcraft operating in low altitude, non-radar operating environments with specific emphasis on how ADS-A and ADS-B could fit into their operations. For this effort the rotorcraft operations in the Gulf of Mexico, which support offshore petroleum exploration and drilling, were selected as the pertinent operational scenario. These operations take place in a highly competitive environment for both the helicopter operators and the petroleum companies that make use of helicopter services.

The next phase of the investigation began looking at possible ADS-A and ADS-B architectures that could be implemented in rotorcraft that are available to NASA. The two research aircraft specified by NASA were a Sikorsky UH-60 Blackhawk and a Bell OH 58 Kiowa. The effort began looking at candidate ADS architectures. The research team investigated avionics and ground facilities that could support ADS-A and ADS-B flight research. A constraint that the research team applied to this effort was to seek off-the-shelf avionics where possible. This approach sought to minimize extensive avionics modifications and utilize avionics that are representative of general aviation, while synthesizing a system that had an open systems architecture suitable for NASA's research objectives.

At this point in the study effort, it became apparent that different approaches could be used to develop the ADS-A and ADS-B architectures. ADS-A has progressed to the point where accepted aeronautical standards are in place. Therefore, the architecture for ADS-A must recognize and be consistent with these standards. The approach used for developing the ADS-A architecture sought to identify applications that included rotorcraft. One such application, the

Modified ADS (M-ADS) system, has been implemented by Norway to provide air traffic services to helicopter operations supporting petroleum exploration and production operations in the North Sea. This ADS-A implementation has been modified in the sense that it has departed from some ADS-A standards developed by RTCA and ARINC's Airlines Electronic Engineering Committee. The equipment has features not called for by RTCA and is smaller and lighter than equipment used by the fixed-wing community. The M-ADS system is used as a basis for, or as a case study for, the ADS-A architecture in this research effort.

ADS-B has not attained the same level of development and standardization as ADS-A. Currently, there are two standards documents [1, 2] produced by RTCA that give system-level standards for ADS-B and provide some initial guidance for manufacturers desiring to produce equipment that supports the cockpit display of traffic information (CDTI) function of ADS-B. A set of basic ADS-B system requirements was developed using the RTCA documents and discussions with NASA officials, Federal Aviation Administration (FAA) officials, avionics manufacturers, helicopter operators, and other persons knowledgeable of helicopter operations and ADS-B. From these requirements and knowledge of what developmental ADS-B equipment might be available from manufacturers, an ADS-B architecture was synthesized. Manufacturers or suppliers who could produce components for the ADS-B architecture were then identified.

1.3 Overview of ADS System Concepts

Essentially, ADS can be defined by its constituent parts. ADS is:

- Automatic in that an aircraft reports its own ship's position to a suitably equipped ground or airborne participant according to some defined communication standards,
- Dependent in that the position is derived from data sources onboard the aircraft, and
- Surveillance in that the purpose of ADS messages is to report the identification and location of the aircraft to others.

ADS is made possible by two necessary elements: reliable data communications and accurate position location. Air/ground or air/air data link provides the former, and global navigation satellites, particularly GPS, provide the latter. Without these, ADS would not be feasible. Furthermore, air/ground data link must provide coverage in the airspace of interest.
The potential for air/ground, ground/air, and air/air data links has given rise to a number of data link operational concepts. Some of these concepts fall within the definition of ADS while others do not. In order to differentiate between ADS system concepts discussed in this report and other data link concepts not covered within the scope of this effort, the following discussion is presented:

<u>ADS Data Link Concepts</u>
ADS-A is characterized by air-to-ground transmission of aircraft state and flight plan data via a ground or satellite communications link. The data is routed only to specific addresses that are on the communications network. The ground facilities manage the data link via uplink messages to participating aircraft. The aircraft equipment responds by sending its data only when requested to do so by the ground control facility. As currently implemented (further described in Section 3), ADS-A services support air traffic operations in oceanic or remote areas that are

beyond coverage of surveillance radar. In these applications satellites provide the communications link.

ADS-B is characterized by transmission of aircraft state and flight plan data via an air-to-air or air-to-ground data link. Each airborne unit manages its own message transmissions (broadcasts) according to prescribed aeronautical standards. The broadcast signal is available to all users, both airborne and ground-based, who are within range. This characteristic of ADS-B clearly distinguishes it from ADS-A.

Other aeronautical data link concepts and applications are under development. These concepts and applications may use airborne and ground equipment common to ADS-A and ADS-B. Some of these data link concepts are identified in the following paragraphs. However, for purposes of this research effort, only the dependent surveillance elements were considered in developing system requirements.

Other Data Link Concepts and Applications

Controller/pilot data link communications (CPDLC) is characterized by transmission of ATM information between the controller and pilot and vice versa. CPDLC may be combined with either ADS-A or ADS-B, but it is an adjunct to ADS, not an integral element of ADS.

Flight information service-broadcast (FIS-B) is the uplink of digital flight information from a ground facility to cooperating aircraft. Information that is typically broadcast is weather and airport information. FIS-B may use some of the same equipment components (both airborne and ground) as ADS-B.

Traffic information service-broadcast (TIS-B) is the uplink of digital traffic information from a ground facility to cooperating aircraft. TIS-B information can be derived from ADS information processed by a ground facility or secondary surveillance radar data processed by a ground radar facility. Like FIS-B, TIS-B may use some of the same equipment components (both airborne and ground) as ADS-B.

Augmentation of global navigation satellite services (GNSS) with differential corrections, called DGNSS, makes use of the digital data link to uplink correction data to a user's satellite navigation receiver. In most current applications, the GPS is the satellite navigation system that is used.

1.4 Overview of the Development Status of ADS

ADS-A is currently being implemented in some areas of the world. These areas are typically in locations where surveillance radar is not available. In particular, ADS-A is being implemented primarily along oceanic air routes traveled by large, fixed-wing transport aircraft. There is one implementation of a M-ADS system by Norway to support helicopter operations in the North Sea. In these applications, satellites provide the communications services. International equipment and implementation standards for ADS-A have been developed and are being implemented by the aircraft operators and the appropriate civil aviation authorities. At this time, ADS-A is going through a validation period whereby current ATM rules and procedures are still

in place. Therefore, users of ADS-A (both controllers and aircraft operators) are currently realizing only limited benefits, primarily greater situational awareness on the part of the air traffic controller and improved flight following services for the operator. However, after ADS-A has been thoroughly validated, users anticipate ADS-A will support improved aircraft surveillance services which will result in reduced separation criteria and improved ATM leading to shorter flight times and reduced fuel consumption.

ADS-B is still in the development phase of evolution. Aviation authorities see many benefits to having ADS-B capabilities, but specific applications of ADS-B are still undergoing test and evaluation, both in the United States and in Europe. Near term test and evaluation activities in the United States include the Ohio Valley tests and Operation Capstone in Alaska. The Cargo Airline Association (CAA) and the FAA are supporting the Ohio Valley tests. FAA's Alaska Region is supporting Operation Capstone. In Europe, several countries are supporting the North European ADS-B Network (NEAN). Tests using NEAN to evaluate ADS-B were performed in the North European CNS/ATM Applications Project (NEAP). The test phase of NEAP was completed in December of 1998. A follow-on program called NEAN Update Program (NUP) is in the planning phase. It should be noted that all of these evaluation programs involve data link applications that go beyond the basic surveillance function of ADS-B, that is, these evaluations include CPDLC, FIS-B, TIS-B and DGNSS applications in addition to ADS-B.

The standards for ADS-B are likewise undergoing development. In the United States, RTCA has several standards activities ongoing at this time through the activities of Special Committee 186. SC 186 has produced two documents: 1) "Minimum Aviation System Performance Standards for Automatic Dependent Surveillance Broadcast (ADS-B) [1]," Document No. RTCA/DO-242, and 2) "Guidance for Initial Implementation of Cockpit Display of Traffic Information [2]," Document No. RTCA/DO-243. The work of RTCA SC-186 is being coordinated with the efforts of the European Organization for Civil Aviation Electronics (EUROCAE) Working Group 51 to develop ADS-B standards that are consistent internationally.

1.5 Relationship of ADS and Free Flight

Free Flight is an innovative ATM concept whereby pilots operating under IFR will be able to freely select their aircraft's course, altitude and speed to a far greater extent than in today's controlled air traffic environment. Free Flight provides the aviation community with maximum flexibility while maintaining high safety standards. The aviation community and the FAA are jointly developing Free Flight. In the United States, the development of Free Flight is being overseen by RTCA. In 1994, RTCA established a select committee of aviation experts to study Free Flight. Their initial report in January 1995 provided a preliminary Free Flight concept. In March 1995, RTCA formed Task Force III on Free Flight to further define the procedures, systems architecture, and transition concept.

Currently, under IFR a pilot establishes a flight plan with air traffic control. The flight plan requires the aircraft to fly along a prescribed route with prescribed altitudes. Deviations from the prescribed routes or altitudes must be first approved by air traffic control. Under Free Flight, pilots will be able to freely choose their route, altitude and speed. The pilot is restricted from this freedom only for the following conditions:

- To ensure separation,
- When operating in congested airspace or at busy airports,
- To avoid entry into restricted airspace, or
- To ensure safety of flight.

In its basic form, Free Flight is based on two airspace zones surrounding the aircraft, a protected zone and a larger alert zone. The size of each zone is based on the aircraft's speed, performance characteristics, and CNS equipment carried onboard the aircraft. The protected zone can never meet the protected zone of another aircraft. The alert zone extends well beyond the protected zone. Upon contact with another aircraft's alert zone, a process is initiated whereby a pilot or an air traffic controller will determine if a change is required in the aircraft's course, altitude or speed in order to avoid a protected zone encounter. In principle, aircraft are allowed to maneuver freely until their alert zones touch.

Many enabling technologies are required in order to implement Free Flight. There must be swift and reliable communications among aircraft, airline operating centers, controllers and pilots. Some of these technologies include:

- GPS and GPS Wide Area Augmentation System (WAAS),
- Traffic Alert and Collision Avoidance System (TCAS),
- Two way data link (TWDL),
- ADS, and
- Aeronautical Telecommunications Network (ATN).

In addition, enhanced decision support systems are needed to assist pilots and controllers in conducting Free Flight operations. At the present time under the Free Flight Phase 1 Program (FFP1), FAA is working on the following core Free Flight capabilities:

- Surface Movement Advisor (SMA),
- Collaborative Decision Making (CDM),
- Traffic Management Advisor (TMA),
- Passive Final Approach Spacing Tool (pFAST), and
- User Request Evaluation Tool (URET) with Conflict Probe.

2.0 GULF OF MEXICO OPERATIONAL ENVIRONMENT

In order to gain a perspective on rotorcraft operations in a low altitude, non-radar environment, a specific operational model was selected upon which to base certain assumptions and constraints of the study. The operational model that was selected is helicopter operations in the Gulf of Mexico that support offshore petroleum exploration and drilling. It should be noted that it is not the intent of this investigation to directly address applications of ADS to operational situations in the Gulf of Mexico. Rather, this operational model was used to make realistic decisions regarding the development of an ADS research capability for NASA whereby realistic operational situations could be addressed.

2.1 Air Traffic Management in the Gulf of Mexico

General Background

The Gulf includes both high altitude (above Flight Level 180 (FL180)) en route traffic (e.g., commercial airlines and business jets) and low altitude (50 to 7,000 feet) traffic (e.g., helicopter operations supporting the offshore oil and fishing industries. This section focuses on the low altitude offshore environment (i.e., the Houston Center Offshore Sector), characterizes its operating conditions, and examines the use of ADS-A to improve surveillance of rotorcraft operating in that environment. Because of the elements essential to implementing ADS-A functionality and their operational interrelationships, this will require that navigation and communications, as well as surveillance, elements also be addressed.

As noted earlier in the introduction and further discussed in a draft FAA planning document [3] that describes an operational concept for CNS services for the Gulf of Mexico, both radar and communications services to support the low altitude, rotorcraft operations in the Gulf are limited by line of sight. Because of the uncertainty in the aircraft position information that results from this situation and to ensure safe separation of the aircraft operating in this airspace, controllers are required to use procedural techniques to provide and maintain separation. These techniques involve the use of vertical, lateral, or longitudinal offsets, effectively “blocking the airspace” for the use of a particular aircraft for the duration of its intended operation. Utilization of the airspace and the operations themselves are not as efficient as would be the case if radar surveillance were available and providing near-real-time information on the position of aircraft and their operations. The procedural inefficiencies associated with the lack of near-real-time aircraft position information are further exacerbated by the lack of direct pilot to controller communications. This effectively extends the time the airspace is “blocked” while information is relayed to the controller (e.g., that the aircraft operation has begun or finished), thus delaying the availability of the airspace to other aircraft.

2.2 Helicopter Operations in the Gulf of Mexico

The majority of operations in the Gulf are flown under VFR. The specific percentage was not contained in available documentation, but discussions with a Houston controller and some operators put the number at around 80 percent. The controller also indicated that during these VFR operations the Houston computer uses flight plan data to depict a “coast” target on the

controllers' displays. This is only a visual aid for the controller to show the approximated position of a helicopter; it is not based on actual pilot reports and is not useable for separation.

The FAA's draft Gulf CNS operational concept [3, pp 28-30] described three types of low altitude operations:

- IFR,
- DVFR (Defense Visual Flight Rules), and
- VFR.

IFR Procedures

An IFR operation starts when weather information (from weather reporting stations located throughout the Gulf) is received from company dispatchers. A flight plan is then filed with the appropriate flight service station via commercial telephone or Houston Center using very high frequency (VHF) voice. However, when the helicopters are located on the oil platforms, IFR clearances are relayed through company dispatchers and pilots, via commercial telephone, because of the line of sight limitations of communications in the offshore environment. The flight plan is activated when the helicopter becomes airborne. The flight is separated using non-radar procedures.

DVFR Procedures

Aircraft departing or operating south of 28° N latitude and proceeding north (i.e., toward the Air Defense Identification Zone (ADIZ) must file a DVFR flight plan. The companies file these DVFR flight plans with the appropriate flight service stations. Once airborne, the pilot requests the flight service station to activate the flight plan and at this point the flight plan information is forwarded to the North American Air Defense (NORAD) Command.

VFR Procedures

Like IFR, a VFR operation starts with weather information (from weather reporting stations located throughout the Gulf) received from company dispatchers. However, companies are not required to file a VFR flight plan for aircraft conducting oil-related or fish-spotting operations within the ADIZ, north of 28° N latitude. These operations are conducted under a waiver to Federal Aviation Regulation (FAR) 99.11 (ADIZ Flight Plan Requirements). Following review by NORAD, waivers for these VFR flight operations are issued and then kept on file at Houston Center. However, Houston Center does not provide any traffic advisories to the VFR helicopter traffic due to the lack of radar coverage for these operations.

[Note: Even if the information were available, the controllers do not have the automation support needed to support the high level of low altitude helicopter operations in the Gulf of Mexico.]

Helicopter Operational Data Summary

Additional insight was provided through discussions with various members of the Helicopter Safety Advisory Conference (HSAC), a voluntary organization of oil companies and helicopter operators established in 1978 to improve the helicopter safety and operations in the Gulf of Mexico. Statistics on helicopter operations in the Gulf were provided by HSAC [4]. They are

based on voluntary data collection activities, and, while not covering all Gulf operations, they capture, and are representative of, the major low altitude rotorcraft flight operations activity in the Gulf.

Table 2-1 Gulf of Mexico Offshore Helicopter Fleet and Operations Summary

YEAR	TYPE HELICOPTER					PASSENGERS CARRIED	HOURS FLOWN	NUMBER OF FLIGHTS
	SINGLE ENGINE (SE)	LIGHT TWIN (LT)	MEDIUM TWIN (MT)	HEAVY TWIN (HT)	TOTAL FLEET			
1997	380	114	131	11	636	3,759,642	471,513	1,705,629
1998*	392	89	94	13	588	2,725,682	454,280	1,390,773

* Data extracted from the voluntary inputs of 24 Gulf of Mexico helicopter operators.

Table 2-2 Gulf of Mexico Offshore Helicopter Hours and Operations by Helicopter Type

YEAR	HOURS PER TYPE HELICOPTER					OPERATIONS PER TYPE HELICOPTERS HELICOPTER				
	SINGLE ENGINE (SE)	LIGHT TWIN (LT)	MEDIUM TWIN (MT)	HEAVY TWIN (HT)	TOTAL FLEET	SINGLE ENGINE (SE)	LIGHT TWIN (LT)	MEDIUM TWIN (MT)	HEAVY TWIN (HT)	TOTAL FLEET
1997	288,433	69,142	109,631	4,297	471,513	1,113,151	249,595	320,023	22,860	1,705,629
1998	303,434	54,509	88,470	7,867	454,280	1,025,105	183,133	167,255	15,280	1,390,773

Table 2-3 Gulf of Mexico Offshore Helicopter Operations – Averages per Helicopter

Averages Per Helicopter	1997	1998	Averages Per Helicopter	1997	1998
Passengers Per Day Per 6 Day Week	14,460	10,483	Annual Hours Per Aircraft	741	773
Flights Per Day	4,673	3,810	Flights Per Aircraft	2,682	2,365
Average Flight Duration in Min.	17	20	Passengers Flown Per Year	5,911	4,636

[Note: The Gulf of Mexico Offshore Helicopter Statistical Report is compiled annually, as a service to the HSAC membership, from information submitted voluntarily by the membership and helicopter operators. The information is neither verified nor reviewed for accuracy and should be treated as unofficial. The data is believed to be representative; however, the HSAC assumes no liability for accuracy or completeness.]

Gulf rotorcraft operations are a mix of commercial charter (Part 135, Air Taxi Operators and Commercial Operators) and private aircraft operations (Part 91, General Operating and Flight Rules). Most petroleum companies hire commercial operators (e.g., Petroleum Helicopters, Inc. and Air Logistics) for their transportation needs, but some companies operate their own helicopter fleets (e.g., Shell and Chevron), which allows them to perform some operations under Part 91. The Gulf CNS operational concept document [3, p 6] identifies a range of approximately 5,000 to 9,000 daily operations that need to be monitored. It should be noted that the level of helicopter activities in the Gulf tends to vary, following oil exploration and

production market forces. The HSAC data show an overall reduction in the Gulf rotorcraft operations from 1997 to 1998. The reductions included operating fleet size (636 to 588 rotorcraft), the number of flights flown (from over 1.7 million to less than 1.4 million), passengers carried (from 3.7 million to 2.7 million), and hours flown (from 471, 513 to 454,280). The average flights per day and flights per aircraft decreased from 4,673 to 3,810 and from 2,682 to 2,365, respectively. However, the average hours flown per aircraft increased from 741 to 773, with a corresponding increase in the average flight duration (from 17 to 20 minutes).

To keep track of their rotorcraft operations in the Gulf, individual helicopter operators have developed separate surveillance methods to ensure flight safety and integrity. The draft Gulf CNS operational concept [3, p 6] indicates that the FAA requires rotorcraft operators to track their operations. However, it also indicates that the methods used vary over a wide range of capability, accuracy, and update rate. Further, none of these data are shared among the companies or with the FAA.

[Note: FAR 14CFR Part 135.79 specifies flight-locating requirements.]

As was discussed in general earlier, low altitude helicopter operations conducted in the Gulf have various limitations imposed upon them due to the CNS capabilities that can be provided by the existing NAS infrastructure. The FAA's mandate for each of the operators to monitor their own operations in the Gulf is a significant factor driving the search for surveillance improvements. The FAA's active participation with the operators to work to find a viable solution for monitoring low altitude helicopter operations may be indicative of the potential for a larger Gulf architecture solution that could be applied to other airspace users, operating regimes, and conditions in Houston Center's airspace (e.g., high altitude IFR). ADS position reporting by data link could potentially provide the means whereby the availability and timeliness of surveillance information in the Gulf is improved for all airspace users.

2.3 Midair Collision Accident History in the Gulf of Mexico

Accident records from the National Transportation Safety Board (NTSB) were researched to obtain a history of midair collisions in the Gulf of Mexico area. These accidents are presented herein only to gain a historical perspective of midair collisions in the Gulf of Mexico area. There is no intent on the part of the authors to imply that any or all of these accidents could have been prevented through the use of either ADS-A or ADS-B. There are many other operational, technical and regulatory factors to consider in averting such accidents. Investigation of these factors is beyond the scope of this study.

NTSB records from 1983 to the present identified three midair collision accidents involving aircraft of United States registry. An Internet search resulted in a report of a midair collision of two Mexican helicopters. Abridged descriptions of the NTSB records and the news report of the Mexican accident follow:

Accident Case No. 1
Date: July 11, 1989
NTSB identification: FTW89FA133A
Location: near Galveston, Texas about 1.5 miles from the coastline over the waters of the Gulf of Mexico at 1,200 feet mean sea level (msl)
Local time of accident: 14:52 CDT
Aircraft make/model: Bell 206L-1 and Aerospatiale AS-350-D
Weather conditions: VFR, no precipitation, no cloud ceiling, 15-miles visibility, wind 11 knots at 180 degrees
Flight conducted under FAR: 14CFR Part 135, On-demand air taxi (Bell 206L-1)
Type of airspace: edge of a control zone (no tower operating)
Communications: both aircraft communicated position and direction of flight prior to collision
Circumstances of accident: Aerospatiale aircraft was in cruise flight at 1,200 feet flying in a northeasterly direction. Bell aircraft departed from a coastal airport in a southeasterly direction. The two aircraft converged and collided in midair. The angle between the flight paths was about 105 degrees.
Injuries: 2 fatal

Accident Case No. 2
Date: June 1, 1997
NTSB identification: FTW97FA208A
Location: about 3 miles west of Intercoastal City, Louisiana over a slough at approximately 700 feet mean sea level (msl)
Local time of accident: 11:25 CDT
Aircraft make/model: Bell 206B and Bell 206L-1
Weather conditions: VFR, no precipitation, scattered clouds at 4,400 feet, 7-miles visibility, wind 5 knots at 330 degrees
Flights conducted under FAR: 14CFR Part 91
Type of airspace: traffic advisory area established by HSAC
Communications: company logs indicate both aircraft communicated position and direction of flight prior to accident
Circumstances of accident: Bell 206B aircraft departed from Intercoastal City and climbed to cruise altitude of 700 feet flying in a westerly direction. Bell 206L-1 aircraft departed from Abbeville Municipal Airport in Abbeville, Louisiana. The destination for the Bell 206L-1 was an oil platform in the Gulf of Mexico. Radar data from an U. S. Air Force aerostat indicated that the Bell 206B was on a heading of 270 degrees and the Bell 206L-1 was on a heading of 210 degrees. The two aircraft collided in midair.
Injuries: 1 fatal

Accident Case No. 3
Date: October 5, 1998
NTSB identification: FTW99FA001A
Location: about 115 miles south of the White Lake VORTAC over the open waters of the Gulf of Mexico at an altitude of approximately 1,000 feet mean sea level (msl)
Local time of accident: 9:08 CDT
Aircraft make/model: Bell 407 and Aerospatiale AS-355-F1

Weather conditions: Visual Meteorological Condition (VMC), clouds 3,000 feet broken, 20 miles visibility and winds at 25 knots
Flights conducted under FAR: 14CFR Part 91
Type of airspace: uncontrolled airspace
Communications: both aircraft filed company flight plans prior to accident
Circumstances of accident: Bell 407 aircraft was flying in a westerly direction when the pilot saw another aircraft between his "three-thirty and four o'clock" position, seemingly in a hard right turn. He then initiated a "hard" left turn away from the other helicopter. Immediately afterward, he noticed that the lower right portion of his helicopter's nose was missing along with both of the tail rotor control petals. The pilot entered an autorotation and landed in the water. The only portion of the Aerospatiale aircraft that were found were two small sections of the landing gear (skid) assembly, both floats (deflated), and three pieces of under belly fuselage skin.
Injuries: 1 fatal, 1 minor

In addition to these accidents involving aircraft of United States registry, a limited amount of information was obtained regarding the midair collision of two aircraft of Mexican registry. The accident happened on November 22, 1998 at about 7:20 am local time over the Gulf of Mexico near the Mexican State of Campeche. The operator reported that both helicopters had taken off from oil platforms. There were 13 persons in one helicopter and 9 persons in the second helicopter. At the time of the report, 18 bodies had been recovered and 4 persons were missing.

2.4 User and Service Provider Benefits in the Gulf of Mexico

Both ADS-A and ADS-B can provide potential benefits to helicopter operations in the Gulf of Mexico. Some of these benefits can be achieved in the near term, others will take some significant amount of validation and experience with ADS before benefits can be achieved. A summary of the primary ADS benefits is identified in the following paragraphs.

2.4.1 ADS-A Benefits

ADS-A can provide timely and accurate position information for participating aircraft to Houston Air Route Traffic Control Center. In the near term, this information can enhance the controllers' situational awareness of the traffic in the Gulf in both visual meteorological conditions (VMC) and instrument meteorological conditions (IMC). This can support improved flight following and provide assistance to emergency response units in the event of a helicopter accident or incident.

Upon completion of the validation phase of ADS-A operations, pilots and controllers will have gained experience in the use of the system. In addition, the validation phase will demonstrate the availability and reliability of the system. It is anticipated that regulatory authorities will at some point approve the use of ADS-A for separation of aircraft conducting IFR operations. Eventually, as more experience is gained, reduced separation criteria can be implemented which will substantially increase the IFR capacity of the airspace in the Gulf.

2.4.2 ADS-B Benefits

A primary benefit of ADS-B is to improve the pilot's situational awareness of nearby participating aircraft. The information provided by ADS-B will enhance the pilot's ability to locate other aircraft, to assess their position and altitude relative to one's own aircraft, and to make decisions regarding the future flight path of one's aircraft. Typically, the primary use of this aspect of ADS-B is in VMC. It should be noted that to be effective, ADS-B must have a high degree of participation by other aircraft.

ADS-B can also be used to provide a ground surveillance function, similar to ADS-A. An ADS-B receiver can be located at a fixed ground site and collect state vector information from participating aircraft in the nearby airspace. The ground facility can process the ADS-B information and relay it to air traffic control facilities via ground or satellite communications. Typically, ground sites will have an array of directional antennas to limit the number of aircraft seen by any one antenna. This allows the ground ADS-B facility to have an extended range as compared to an airborne receiver.

2.4.3 Combined ADS-A and ADS-B Benefits

After both ADS-A and ADS-B concepts have been fully proven, distributed ATM functions may become operational. In this scenario, pilots will assume some responsibility for separation of their aircraft from nearby aircraft through the use of ADS-B with CDTI. The controller, using ADS-A, will be in a monitor role to assure that aircraft remain separated. Such procedures are part of the "Free Flight" concept envisioned as the future ATM system.

3.0 ADS-A SYSTEM DEVELOPMENT

The following paragraphs provide a brief developmental history and evolution of ADS-A.

3.1 Standards Development

In January 1989, the ICAO's Air Navigation Commission (ANC) expanded the terms of reference of the Secondary Surveillance Radar Improvements and Collision Avoidance Systems (SICAS) Panel to include the development of ICAO material to permit systems commonality and interoperability between air traffic services (ATS) data links. This task emerged from the work of the Special Committee on Future Air Navigation Systems (FANS) which emphasized the need for the interchange of digital data over dissimilar aeronautical data links. The committee also recommended that the principles of the International Organization for Standardization (ISO) open systems interconnection (OSI) architecture be applied in developing aeronautical data links in order to provide for their interoperability.

The SICAS Panel developed the concept of the ATN to support computer-to-computer communications operated by civil aviation authorities and aeronautical operating agencies. The SICAS Panel completed development of a description of the ATN and the first edition of the ATN manual was published in 1991. The ANC transferred the work of developing Standards and Recommended Practices (SARPs) and Guidance Material for the ATN to the newly constituted ATN Panel. In May 1997, the panel presented validated SARPs for ADS-A to the Air Navigation Commission for approval. Since that time, the ADS-A SARPs have been accepted by the member states of ICAO.

To gain some early benefits in advance of the SARPs, the Airlines Electronic Engineering Committee (AEEC) and RTCA undertook development of a set of bit-oriented message standards. The FANS 1/A message standards for Automatic Dependent Surveillance (ARINC 745) and CPDLC DO-219 were approved in 1993. Since there was no available bit-oriented air/ground data link system, the messages were transferred over the existing character-oriented communication system (i.e., the Aircraft Communications Addressing and Reporting System (ACARS)) using end-to-end encoding rules defined in ARINC Characteristic 622.

These two efforts resulted in two somewhat divergent systems and no plan for transition from one to the other. The ANC recognized this problem and approved tasking in the ATN Panel's work program to: "Monitor activities related to the implementation of and the transition to the ATN and develop solutions to related problems." Subsequently, the ADS Panel, in coordination with the ATN Panel, completed guidance material for a recommended accommodation strategy.

3.2 Multiple Standards

While differing in some details, the ADS-A SARPs are the same as ARINC 745-2 in basic concept. Both are contracted-for from the ground and both have event and periodic reporting of essentially the same data. The primary difference is that the ADS-A SARPs specified the ATN as the air/ground network, and ARINC 745-2 specified the ACARS air/ground network.

Although there are significant technical differences between ATN and ACARS, the fundamental difference is that the ATN has been designed from the beginning for use in ATS communications whereas ACARS was designed for Aeronautical Operational Control (AOC) communications. Furthermore, the ATN has validated and approved SARPs while ACARS does not.

3.3 Message Integrity

A particular built-in feature of the ATN that is essential for ATS communications applications is an integrity check that covers the entire communications path, i.e., check end-to-end. In the ATN, the Transport Layer performs this function because the Connection-Oriented Transport Protocol Level 4 (TP-4) is specified for use with all ATS messages. TP-4 calculates and inserts into the message a 16-bit cyclic redundancy check (CRC-16) at the message origination end. At the receiver end the CRC-16 is recalculated and checked against the 16-bit field in the message. If there is a match, there was no error. CRC-16 assures integrity of approximately 10^{-6} (i.e., a probability of one in a million that an undetected message error will occur).

FANS 1 messages, both ADS-A and CPDLC, both implement the same CRC-16 in the end systems. The difference is that this is not a basic part of the ACARS network, but is an additional function of the application software. The implementation is different but the results are the same; integrity of approximately 10^{-6}.

3.4 ADS-A Implementations

The first operational aircraft equipped with ADS-A capability was the Boeing 747-400. This aircraft was equipped with a flight management system (FMS) which included three air traffic control (ATC) data communication applications: ADS-A, CPDLC, and ATS Facilities Notification (AFN). Collectively these features, along with others, were knows as the FANS 1 Package. The FANS 1 package was certified in June of 1995 and went into service in the South Pacific on flights between the US and Australia and New Zealand. ADS-A, as defined by ARINC 745-2, has been used in some of the flight information regions (FIRs) in place of high frequency (HF) voice position reporting.

Airbus Industries has developed the FANS A avionics for implementation of the same ADS-A, CPDLC, and AFN applications in accordance with the same standards documents. The international community has coined the term FANS 1/A to indicate either airframe manufacturer's implementation of these applications.

Since that time, a number of civil aviation authorities (CAAs) have instituted either demonstrations or trials of ADS-A. The ground, as defined in ARINC 745, contracts for ADS-A. In other words, the ground surveillance element will send a "contract" up to the aircraft. There are two kinds of contracts defined in ARINC 745; periodic and event. Periodic contracts specify a time interval for regular, automatic reports to be sent by the aircraft. There is a basic position report and a number of optional data fields, such as meteorological data, that may be specified. Event contracts specify certain conditions, which, if met, will trigger a position report from the aircraft. These conditions include departure from assigned altitude by a specified

amount, departure from the flight path laterally by a specified number of nautical miles, crossing of a waypoint, etc.

Recently, FANS 1 ADS-A has been proposed for the North Atlantic FIRs. NAV CANADA has instituted development of a service called Central ADS Service (CADSS). This service will permit FANS 1-equipped aircraft to forego voice position reporting and instead permit those aircraft to report via the event report for waypoint crossing. The CADSS server will establish the ADS-A contract with the aircraft, receive the waypoint crossing reports, and convert them into text position reports for delivery to the oceanic area control center (ACC) via the Aeronautical Fixed Telecommunication Network (AFTN). This new service will give appropriately equipped aircraft the opportunity to report automatically (without pilot action), will permit the ACC's to participate without modification to existing oceanic controller position software or hardware, and will reduce the HF voice traffic load. All of this while affording a measure of experience with the data link medium.

Also, in April 1999, the Norwegian CAA mandated the use of ADS reporting by helicopters flying to and from oil platforms on the Norwegian Continental Shelf in the North Sea. The system that the Norwegians are using to provide this capability is discussed in more detail in Section 4.2.

4.0 ADS-A SYSTEM ARCHITECTURES

4.1 Current ADS-A Technologies and Implementations

This section discusses the ADS-A function and provides general information on its current implementation as well as information on a specific implementation of the ADS-A function pertinent to rotorcraft operations in a non-radar environment.

Currently the best indicator of the ADS-A technology can be seen in the activities of the air transport industry and many of the world's CAAs as they implement future CNS/ATM capabilities. The airframe manufacturers have near-term implementations of CNS/ATM capabilities incorporated in their FANS avionics packages. The Airbus package is called FANS-A, while the Boeing package is called FANS-1. The general avionics package is referred to as FANS-1/A.

As of November 1998, there were approximately 330 operational FANS-1 aircraft [5, p 30]. These include Boeing B-747-400, B-757, B-767, and B-777 aircraft. The B-747-400 and B-777 aircraft come off the production line equipped with the FANS-1 avionics package. Boeing plans to certify the MD-11, MD-90, B-717, and the next generation B-737 aircraft for FANS-1. Airbus is implementing FANS-A, which is expected to enter service in July 2000, on the A330/340 aircraft [6, p 27].

FANS 1/A is an initial implementation of CNS/ATM. This avionics provides a subset of the ICAO-defined ADS-A and CPDLC functions over the existing VHF and satellite ACARS data links using ARINC Characteristic 622 to convert messages back and forth between character-oriented and bit-oriented protocols. Since CNS/ATM is in an evolutionary state progressing toward an end state based on ATN operations, FANS 1/A is intended to enable the airlines to achieve earlier benefits of a CNS/ATM environment without precluding or interfering with the implementation of the ATN-based CNS/ATM environment.

While the future CNS/ATM system will provide other functions besides ADS-A and CPDLC, ADS-A and CPDLC are important in that they require the combination of aircraft and ground systems working together in a CNS/ATM environment. ADS-A alone or ADS-A and CPDLC have already been implemented at many sites throughout the world. Countries with sites using these capabilities to support airspace operations include: Australia, Fiji, Indonesia, India, Japan, Malaysia, Mongolia, New Zealand, Russia, Singapore, South Africa, Sweden, Tahiti, Thailand, United States (Oakland and Anchorage Centers). Other sites using these capabilities in demonstrations include: Canada, China, Hong Kong, Iran, Latvia, Norway (North Sea), South Korea, and United Kingdom (North Sea).

The use of ADS-A and CPDLC to improve surveillance and communications, respectively, in procedural airspace has been identified as providing the following benefits:

- Enhancement of safety,
- Improvement of the economy of flight (e.g., optimal flight profiles), and
- Increase in airspace capacity.

Currently, these functions are being introduced incrementally as part of a transition process toward eventual achievement of a full CNS/ATM environment. ICAO has provided transition guidelines to States stating in part that during the transition period, after an initial ADS-A position-reporting capability is introduced, the current levels of integrity, reliability, and availability of existing position-reporting systems must be maintained. This is necessary to provide backup for ADS-A and to support non-ADS-A equipped airspace users.

ICAO also notes that these data link provided services have for the most part already been demonstrated as being viable. However, ICAO further indicates that there is an urgent need for States and other organizations to undertake trials and implementation of pre-operational systems, as soon as practical, with a view to early validation and to facilitating a timely implementation of a fully operational system. These statements appear to reflect what is occurring with the ADS-A implementations to date. Introduced into procedural airspace the existing separation standards are retained, and ADS-A is used to support the airspace operations (e.g., conformance monitoring) while at the same time data are gathered on ADS-A performance.

4.2 Norwegian CAA ADS-A Activities

Background

Practically all of the ADS-A implementations are being driven by the commercial air transport aircraft as discussed earlier with regard to the FANS 1/A avionics package produced by Boeing and Airbus. However, the one notable exception to this is the Norwegian Civil Aviation Authority's (NCAA's) M-ADS program [7]. The system is called Modified-ADS because it has additional features not called out in the Minimum Operational Performance Standards (MOPS) for ADS-A Equipment (RTCA document DO-212). In addition, M-ADS equipment does not meet the ARINC standard for aeronautical mobile satellite service (AMSS) equipment (the M-ADS equipment is smaller and lighter than the ARINC standard equipment).

[Note: Information presented on the NCAA M-ADS system and program is taken from an NCAA report entitled: "ADS for helicopters in the North Sea M-ADS", dated 15 October 1998, which is identified as reference 7.]

The M-ADS program had its genesis in a 1990 study of the flight safety of helicopter operations in the North Sea, concluding that significant safety improvements could be obtained. In 1991, the NCAA, with the support of the oil companies, initiated activities to evaluate the feasibility of the long data communication chain and the effect of helicopter blades on satellite communications. Based on successful flights in 1992 using the AMSS provided by Inmarsat, a project was established to develop, test, and implement an ADS-A system to support offshore helicopter operation on the Norwegian Continental Shelf.

The NCAA and Kongsberg Defence & Aerospace (Kongsberg) were the two primary organizations conducting the program. The NCAA was responsible for the ground segment while Kongsberg had primary responsibility for the airborne and space segments of the system along with the system application programs.

[Note: Kongsberg Defence & Aerospace is an operating unit of Kongsberg Group ASA. Kongsberg Group ASA is a Norwegian corporation that is 51 percent owned by the Norwegian government. The remaining shares are publicly owned.]

During 1993 and 1994, Kongsberg evaluated several data link concepts based on the CNS/ATM architecture being promulgated by ICAO. This resulted (in 1994) in a decision that the ADS-A system would be based on the evolving ICAO CNS/ATM standards and that the communications protocols used would follow the ATN standard.

Prototype equipment was developed in 1995 and 1996, with the initial flight trials occurring during the last half of 1996. These trials were conducted in coordination with the European ADS program. Helicopters in regular service in the North Sea were tracked from take-off to landing on offshore helipads using position-reporting rates of 15 to 60 seconds. Since 1997, the NCAA has been implementing the various ATN protocols needed for the ground segment of the system and continuing to collect data. In April 1998, the NCAA made it mandatory for helicopters to carry equipment that can down link data to ATC using the M-ADS system on 1 January 1999. Helicopters that are not equipped at that time will be required to fly outside of the M-ADS lanes, as discussed in sections 4.5.2 and 4.5.3.

[Note: This date was subsequently slipped to 22 April 1999 [8] due to delays associated with receiving final certification approvals and obtaining and meeting production orders.]

4.2.1 Overview of North Sea Helicopter Operations

Helicopter operations in the North Sea are generally conducted under IFR conditions. Helicopters operate from mean sea level to 8,500 ft (usually from 3,000 ft and below). Their operations include offshore areas around Norway (from 0° to 30° East longitude and from 56° to 73° North latitude). Helicopters in this area transport approximately 600,000 passengers per year. Distances from shore to the oil platforms vary from 120 to 200 nm. Pilots provide position reports by voice every 15 minutes when not in radar coverage (about 50 percent of the time on average) and are required to fly racetrack patterns (i.e., one-way tracks into and out of the area) to maintain separation between inbound and outbound traffic. Typical flight duration between shore and offshore destinations is 1_ to 2 hours. The nature of these operations and the typical conditions in the North Sea were major determining factors that a 15 minute reporting rate does not meet the needs of surveillance, particularly for timely initiation of search and rescue purposes.

4.2.2 System Requirements

The NCAA established the following system requirements for the M-ADS system:

- Radar look-alike surveillance by air traffic controllers from sea level and up (meaning near-real-time four-dimensional (4-D) position information (i.e., latitude, longitude, altitude, and time) from the aircraft),
- No special purpose infrastructure to be installed on the ground, except for display and communication systems at the ATC centers,

- Only data need be transferred (in both directions) between aircraft and ATC, and
- The implemented surveillance system shall follow the ICAO guidelines for the FANS concept.

4.3 M-ADS System Architecture

In general, the M-ADS system is comprised of airborne, space, and ground-based segments. The airborne segment consists of the following elements: a GPS receiver and the aircraft's altimetry system determine the aircraft's 4-D position; the M-ADS unit manages the process and develops the messages; and the satellite transceiver (the aircraft earth station (AES)) sends the messages. The space segment includes the GPS satellite constellation that provides the signals used by the receiver to determine its position and time and the Inmarsat satellites that provide the communication link to the ground earth station (GES). The ground-based segment includes the GES, the ground communications infrastructure interconnecting the ATC centers with the GES and each other, and the displays and associated M-ADS software at the centers.

Functionally, the airborne ADS-A function establishes the communications link between the aircraft and the ATC ground segment (ATCGS) as well as formats the data from sources onboard the aircraft to meet the requirements of the ADS-A contract requests from the ATCGS. The air-ground data link itself (AES to GES to ATCGS) transfers the data to the controlling ATCGS. The ground-based ADS-A processor system at the ATCGS collects and processes the received data for presentation to the controller as well as provides a means to create and transmit ADS-A contract requests to the aircraft.

A detailed description of the M-ADS architecture is contained in Appendix D.

4.4 M-ADS Program Results

The NCAA report provides information on the M-ADS program results. The report addressed several areas including: interoperability, position reporting (tracking performance), and communication performance.

<u>Interoperability</u>
One of the goals for the system was to be an international interoperable system. To that end it was tested with other ADS-A systems (France, United Kingdom), including the NCAA ground system implementation. While successful, the tests did identify a number of interface problems relating to the state of ATN protocols development - their interpretation, required use of certain data groups (e.g., Flight Identification), different settings for communication protocol timers, default priorities).

<u>Tracking Performance</u>
The NCAA report noted that as of July 1998, approximately 10,000 flight hours have been logged with the M-ADS system. Successful flight demonstrations were conducted at Farnborough International '96, allowing the audience to follow the helicopters down to sea level as they approached the oil platforms. Similar successful demonstrations were also conducted at the 1998 Exhibition and Conference in Maastricht and at the 1998 ICAO Conference in

Rio de Janeiro. The report also showed a plot of position reports from a test flight where different reporting intervals (10 seconds, 30 seconds, and 5 minutes) were used.

Communication Performance

The NCAA report's discussion of communication performance focused on message delivery times. Two factors were identified as affecting delivery times: the type of satellite channel used to send the message and the channel data rate.

The M-ADS airborne equipment uses the Inmarsat Aero-L service, giving a channel data rate of 600 bps or 1,200 bps. A random access channel (R-channel) is faster than a time division multiple access (TDMA) channel (T-channel) because if the message is less than 33 octets long, it can be sent immediately via the R-channel. A message sent via the T-channel is delayed since the satellite data unit (SDU) must wait until a T-channel slot has been assigned by the GES. The T-channel allocation itself is initiated by a request on the R-channel.

The report provided a distribution plot for the one-way (aircraft to ground) transit delays based on an approximate sample size of 16,000 messages. The plot showed short (R-channel) messages (majority of the messages) with a peak centered at 5 seconds and the long (T-channel) messages with a transit delay peak centered at 15 seconds.

The report also noted an analysis of data from a number of flights that indicated that switching of communication paths between satellites or GES's was a relatively uncommon occurrence. When it did occur, its duration ranged from 25 to 55 seconds (34-second average). Most of the handovers occurred while the helicopter was on the ground, or shortly after takeoff.

The report also identified that the ADS-A function in the M-ADS unit is set up to transmit at a rate that can exceed the capacity of the satellite subnetwork. While fully in conformance with ATN specifications; this means that when this happens, the transmit window in TP-4 is filled (due to non-acknowledged messages), after which the connection is closed. This was an item to be further addressed as part of experience gained from pre-operational activities.

4.5 M-ADS Operational Implementation

The use of M-ADS position reports in NCAA airspace operations is discussed in a Norwegian CAA Working Group Paper [9] on M-ADS Operational Concept, dated December 10, 1998. The introduction to the operational concept states that the M-ADS system will perform total surveillance of helicopter traffic. The purpose of the surveillance is to follow traffic in areas that are not covered by radar thereby improving air traffic services by increasing the quality of alerting service and flight information service (i.e., traffic advisories). It is further stated that the ultimate goal is to use the M-ADS data for Flight Control Services.

[Note: Discussion with a NCAA representative indicated that 10 M-ADS helicopters were flying as of June 1999.]

After the introduction, the operational concept paper has sections addressing criteria for operational use, airspace structure, M-ADS procedures, and ADS-A service training. A supplement on implementation and operational test immediately follows these sections.

4.5.1 M-ADS Operational Use Criteria

This section described controller qualifications (e.g., trained on both radar and M-ADS systems) as well as described M-ADS system performance items (e.g., contracts, alarms, log-ons). M-ADS and radar will become integrated. M-ADS will be used to provide Flight Information Service and Alerting Service. Flight Information Service will be based on presentation of the total traffic picture (i.e., includes both M-ADS and radar aircraft position symbols) on the controller's display in his or her normal working position. Outside radar coverage, and in case of radar failure, only the ADS-A position symbol will be presented; while when in radar coverage, only the radar position symbol will be presented.

[Note: Flight Information Service for M-ADS is used in a broader context than is commonly used in the United States. In this context, Flight Information Service refers to what would typically be called Traffic Information Service in the United States.]

Aircraft position update rates were identified as follows:

Normal rate:	30 seconds
Automatic rate setting:	
• ADS-A plots closer to each other than 20 nm, with relative altitude less than 1,000 ft	20 seconds
• ADS-A plots closer to each other than 10 nm, with relative altitude less than 1,000 ft	10 seconds
• Operations below 700 ft	10 seconds

[Note: These update rates are increased by 50 percent later in the paper (supplement) as part of a requirement to obtain data to assess system capacity issues during tests being conducted as part of the implementation activities.]

4.5.2 Airspace Structure

ADS-A areas (lanes) are established between the Norwegian mainland and established oil fields on the Norwegian Continental Shelf. These areas are classified as Class G airspace (uncontrolled airspace), with vertical extension from 1,500 ft to 8,500 ft. ADS-A and radar-based Flight Information Service and Alerting Service will be provided inside the ADS-A areas to aircraft equipped with M-ADS for the entire duration of the flight. This will provide opportunities for direct routing of flights between land based and offshore destinations and back again. There are provisions for dispensation from the M-ADS equipage mandate (see section 4.5.3).

4.5.3 M-ADS Procedures

Aircraft not equipped with M-ADS will be requested to fly outside of the ADS-A areas and will need to report their position every 30 nm and at entry and exit points for terminal maneuvering areas. There will also be a track system defined by VHF omni-directional range (VOR) radials at land bases in ADS-A areas. This will be used by the non-M-ADS aircraft and will serve as a backup system for M-ADS in the event of technical problems.

The report also discusses the proper procedures for ensuring ADS-A identification before any services can be provided. Other areas address time tagging and alerts based on missing ADS-A reports, correct phraseology to distinguish between a radar-based traffic advisory service and an M-ADS-based traffic advisory, altimeter setting procedures , and dispensation procedures.

4.5.4 Training

The training section of the NCAA report provided the structure of the training material content to be addressed. This included a system description, use of the equipment, airspace structure and routing, and criteria for operational use (e.g., updates of position signals, alarm activation, other procedures).

4.5.5 Supplement to the NCAA Report

In regard to the status of the ATC centers, the supplement to the NCAA report identified an on-going radar improvement program that is to be implemented in 1999. ADS-A data are to be integrated into the improved radar system so that they can be presented on the radar displays at the ATC positions. The radar and ADS-A display system (RaADS) was identified as already installed at the ATC centers.

The supplement also addressed test operations associated with the M-ADS implementation. The ability to test the system capacity during the test period was identified as especially important objective. Also, all the different functions of the RaADS system are to be tested to ensure change requests are identified and properly planned for. It was noted that the current routines regarding reporting position by radio must be maintain during the test period.

4.5.6 Implementation Schedule

Another area discussed in the supplement was implementation. The working group responsible for the M-ADS operational concept determined the need for M-ADS to be implemented in four phases. The time frames for these phases were identified as tentative:

- Phase 1 (1/28/99 to 8/1/99)

This is the operational test period for the Alerting Service at all three ATC centers. Stavanger ATC Center also starts the operational test period for the Flight Information Service simultaneously.

- Phase 2 (8/1/99 to 12/31/99)

RaADS is to be operational for use in the Alerting Service at all three ATC centers. Stavanger ATC Center also provides M-ADS-based Flight Information Service during the opening hours* of Sector West. M-ADS is implemented in the improved radar system.

*[Note: During periods of low helicopter activity (nights and weekends), Sector West is closed and the responsibility for helicopter traffic is transferred to other sectors.]

- Phase 3 (1/1/00 to 4/1/00)

This is to be the operational test period of M-ADS integrated with the improved radar system.

- Phase 4 (4/1/00)

This is when M-ADS integrated into the improved radar system is scheduled to become operational. All three ATC centers will be able to provide M-ADS-based Alerting Service and Flight Information Service 24 hours a day.

[Note: A request was made of the M-ADS NCAA representative to clarify the implementation milestones as they may relate to using M-ADS for Flight Control Services. However, as of the time of this report, no additional information is available on the subject.]

Based on the above discussions of the M-ADS technology and its operational concept, the implementation program currently underway is totally consistent with the guidelines and transition approach recommended by ICAO for introducing a new data link service into the operational environment. The current procedures (i.e., voice reporting of position) are being maintained while data are being collected to validate the technology and new procedures associated with the airspace specific operations.

While the current implementation is using the new capability (i.e., M-ADS position reports) for flight following and not yet reducing separation standards based on the availability of these reports, this may ultimately be possible once the data and experience gained from the current operations provides the basis for such reductions. As noted in the introduction to the M-ADS operational concept, the ultimate goal is to use the M-ADS capabilities for Flight Control Services.

5.0 ADS-A OPERATIONAL ACCEPTABILITY

This section provides background information and discussion of areas pertinent to the acceptance and use of ADS by airspace users and air traffic service providers.

5.1 New Technology Considerations

Each new technology or advancement considered for introduction to improve ATM in the Gulf must provide some immediate benefit to the air traffic service provider (i.e., the FAA) or the airspace users (e.g., low altitude helicopter operators in the Gulf), preferably both. The use of data link communications to provide new and improved air traffic services is clearly the direction in which the future ATM environment is moving. Data link communications are the foundation on which CNS/ATM capabilities are built. Installation of data link communication capabilities is an essential, if not the best initial, step toward ATM.

The aeronautical community has over twenty years of experience with air/ground data link for AOC. This experience has demonstrated a number of facts:

- The use of air/ground voice has been reduced dramatically,
- Airline operations and maintenance have become more effective and more efficient,
- Data link is used for purposes that were unimagined when it was inaugurated, and
- Ground automation systems have steadily increased in capability to take advantage of the air/ground data link.

Air traffic service providers and other airspace users have the opportunity to gain similar advantages from the use of air/ground data link. However, the evolution of equipment and procedures must be done in a coordinated manner. This is the current situation now underway with the ADS and CPDLC capabilities provided by the FANS 1/A avionics and being implemented by various CAAs into their ground systems.

In general, the benefits that are provided by the ADS function of automatic position reports to the controller are currently more directed to the ATS provider than the airspace user. ADS improves the controller's situational awareness of the airspace as well as the controller's ability to perform conformance monitoring. This has some indirect benefit to the airspace user in terms of safety or perhaps by providing increased opportunities for more direct routing or rerouting because of the timely position reports that are available to the controller. However, the airspace user will not receive the major benefits ADS has to offer until the airspace is restructured based on the automatic position reports provided by ADS. When this occurs, the user may expect the following benefits:

- Capacity increases,
- Reduced costs due to time and fuel savings, and
- Increased flexibility and efficiency due to the availability of better and more timely information on which to base decisions.

5.2 Joint Industry/FAA Activities

As noted earlier in this report, the Gulf airspace was recently restructured based on a GPS grid overlay that provides waypoint fixes every 20 minutes of latitude or longitude. Since this grid overlay is based on GPS fixes and not land based navaids, the southern boundary of the offshore airspace was able to be moved further south. This allowed domestic, non-radar separation standards to be used instead of the ICAO oceanic separation standards previously required in that airspace.

The development and implementation of this grid was a cooperative effort between the FAA and the helicopter operators in the Gulf to address a pressing need for improved operations during IFR conditions. While the majority of helicopter operations are conducted under VFR conditions, when IFR conditions occurred, Houston Center experienced heavy workloads trying to provide procedural separations based on flight paths defined by the available VOR radials. This resulted in helicopter operators experiencing large delays or flight cancellations.

The grid system increases the number of aircraft that can operate in the airspace under IFR conditions while also helping to manage the workload at the Center. It does so by increasing the number of GPS waypoint position fixes available. The accuracy of the position data and the flexible routing capability available from GPS supports the use of the grid procedures. This is a good example of a win-win situation for both the airspace users and service providers.

This sort of FAA/Industry joint approach to developing and implementing needed CNS improvements to the airspace appears to be the preferred path to implementation of new capabilities. For example, since the ADS function requires both an airborne component (e.g., FANS 1/A or M-ADS) and a ground-based component (e.g., complementary ADS function software, automation, and displays resident at the controlling ATS provider's facility) to achieve a meaningful operational capability, both have to be approved for type acceptance and operational use. Each segment (airborne and ground) has separate approval processes and different FAA offices are responsible for them.

5.3 Certification

This approval process is an important issue because it directly affects the time and costs required to deploy a new capability. The airborne community uses supplemental type certificates (STCs) as approval for modifications or changes to an existing aircraft such as might be required for new avionics to implement ADS. The FAA Aircraft Certification Service is responsible for approving the STC (i.e., design and airworthiness) while the FAA Flight Standards Service is responsible approving its operational use in the airspace. In the case of the ground component, modifications to an existing FAA facility are handled similarly to the airborne STC process. Assuming it is FAA-owned equipment, the changes are designed by FAA field engineering and implemented by FAA field technicians. These are changes to equipment that was originally developed and factory/type accepted by a FAA functionally integrated product team (IPT). The In-Service Checklist that was used by the IPT and FAA's extended member team in support of the original operational commissioning of the equipment is then updated to reflect the changes. The recent RTCA Task Force 4 report on certification [10] indicated that the aviation community

is experiencing rapid technology advancements in the area of CNS/ATM systems. It noted that this presented an opportunity to use the FAA's certification authority to better provide CNS/ATM services to the aviation community. The report further noted that by using its certification authority to conduct type acceptance of commercially developed navigation systems, the FAA is achieving considerable reductions in equipment development and acquisition costs, while also reducing the time from requirement identification to service delivery. The report used the GPS Local Area Augmentation System (LAAS) as an example of this process.

Given the successful working relationships that were established to develop and implement the GPS grid overlay, a good approach to addressing both the certification and surveillance improvement issues may be to build on these established relationships to agree on and implement improved operational capabilities in the area. Since surveillance improvements in the Gulf are likely to require both the airspace users and the FAA to make changes to their equipment, it is in the best interests of both groups to work closely together. Indeed, this may already be occurring.

This is supported by the FAA's draft Gulf CNS operational concept [3], discussions with some of the HSAC operators, as well as discussions with a Houston center controller working in this area. There appears to be a general willingness to support a common solution for providing improved surveillance capabilities for rotorcraft in the Gulf of Mexico. This could include helping development activities. Chevron has been forwarding position reports (received from the Flite Trak system used to track its helicopters) to Houston Center to support their efforts to gain operational insights into having this type of data available at the Center.

Discussions with the Chief Pilot at Chevron, who is also the Chairman of the HSAC Committee on Heliports/Airways, confirmed this willingness to participate in a common solution to surveillance improvements in the Gulf. The operators have a real need to address in the monitoring of their VFR helicopter operations in the Gulf (a mandate they have from the FAA). To address that requirement they have all implemented and are operating independent systems at their own expense. Chevron uses Flite Trak, others use VHF voice radio to report their positions every 15 minutes.

These independent systems can be viewed as unnecessarily costly when considered in terms of a common system and the operating benefits that could be provided, both near- and far-term, by using technologies that would enable CNS/ATM.

The key to using ADS, or ADS and CPDLC, for providing improved surveillance of helicopter operations in the Gulf is communications coverage. If the low altitude coverage is complete (i.e., to within 50 to 100 feet of the surface), then a data link can be used to provide both low altitude ADS position reporting as well as direct pilot to controller communications via CPDLC.

VHF and Mode S data links have line of sight limits and would require locating remote air/ground transceivers out in the Gulf to provide coverage. Use of HF data link (HFDL) or satellite communications (Satcom) in the Gulf to provide data link communications would not have line of sight limits. All of these data link technologies are designated ATN air/ground subnetworks that will support the provision of CNS/ATM services.

The current ACARS technology, while not ATN compliant, is delivering ADS position reports today, both short-range (i.e., VHF) and long-range (i.e., Satcom and HFDL). One method of implementing data links applications in an incremental manner while continuing to support legacy technologies is illustrated in Figure 5-1 below. This method uses a communication gateway approach, illustrated in the figure, which permits immediate implementation of data link using ACARS while allowing for the future inclusion of ATN support. In addition, translating voice position reports and other data into a format compatible with the controller automation system may support voice-only aircraft. This is an example of the kind of implementation strategy that supports early benefits while allowing for migration toward the CNS/ATM 'end-state'.

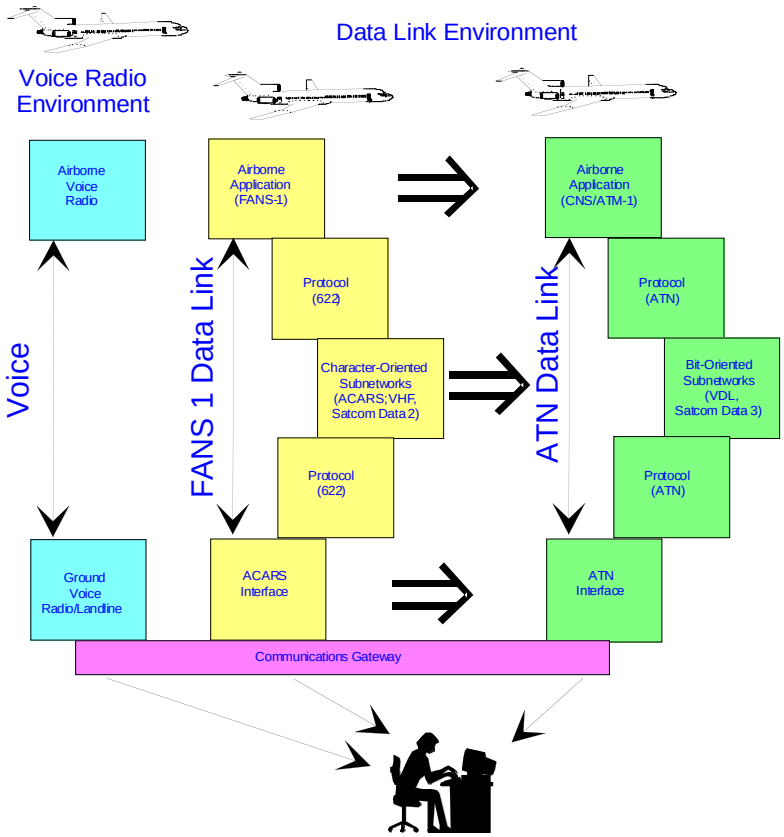

Figure 5-1 Gateway Accommodates Multiple Air/Ground Networks

5.4 Transition Considerations

Whichever data links are used to provide the ADS position reports, they all require the reports to be processed and displayed to the controller before any operational benefit can be derived. For existing ground facilities this means interfacing with established operational systems and procedures and requires a transition strategy. In the case of an ARTCC like Houston Center, any transition strategy must address the key data processing element at the Center, the Host computer system. This system is responsible for processing flight plan and radar data to generate traffic displays for the controller. The primary data interface to the Host computer is the

peripheral adapter module replacement item (PAMRI). The PAMRI is the Host interface peripheral that provides a conduit through which the Host receives and exchanges data. This interface peripheral, like the Host and other Center equipment, is at the end of its life cycle and is scheduled for replacement as part of the program to upgrade the NAS en route infrastructure in four steps as discussed in FAA's NAS Architecture Version 4.0 of January 1999 [11].

[Note: The discussion of the NAS en route architecture upgrade program which follows is based on the FAA's Version 4.0 architecture and is, in general, a description of the program as it applies to all en route centers and not just to Houston Center.]

The first step in this NAS upgrade program is the replacement this year of the Host computer system (running essentially existing software). This is followed in Step 2 (planned for the 2000 to 2004 time frame) with the replacement of the PAMRI along with a new backup computer for the Host to replace the direct access radar channel (DARC) processor, the existing backup. The PAMRI interface peripheral function will be performed by the en route communications gateway that will sustain the existing Host interfaces as well as provide additional ones that will enable the Host to receive additional input data from terminal radar sources. During this time any additional functionality introduced at selected ARTCCs as part of the Free Flight Phase 1 (FFP1) program (e.g., CPDLC Build 1 and Build 1A), will be implemented on external processors (i.e., separate from the Host). These functions will be integrated into the core en route software architecture during the software reengineering later in Steps 2 and 3.

It is during Step 3 (2005 to 2007) that the en route architecture is scheduled to be upgraded to accept ADS reports (both ADS-A and ADS-B). Besides introducing the new surveillance data inputs, this will involve modifications to the en route communications gateway and related computer hardware as well as to systems software and related air traffic control decision support software algorithms. Another key surveillance processing improvement planned during this time is the ability of sensors and automation systems to send and receive surveillance reports in a common message format, the all-purpose structured EUROCONTROL radar information exchange format called ASTERIX. In Step 4 (2008 to 2015), the intent is to evolve to a common hardware and software structure for all en route centers, including the oceanic centers. In terms of ADS the architecture envisions ADS-A providing position reports for oceanic airspace while ADS-B provides position reports in domestic airspace. However, the architecture document notes that some applications may remain unique in each domain.

Some uniqueness is likely to be the case for Houston Center which has both oceanic and domestic offshore domains, the latter with the unique surveillance requirements of the low altitude non-radar helicopter operations environment. As noted previously in the discussion of figure 5-1 and identified in the FAA's NAS architecture document, the use of a communications gateway to accommodate the introduction of new systems and data protocols is an logical and useful strategy. The gateway provides a flexible means for satisfying the different interface and processing requirements that will be involved during the initial introduction of any new surveillance capabilities, while still allowing the capabilities of the existing systems to be sustained. An example of this concept as it might apply to Houston Center is illustrated in figure 5-2.

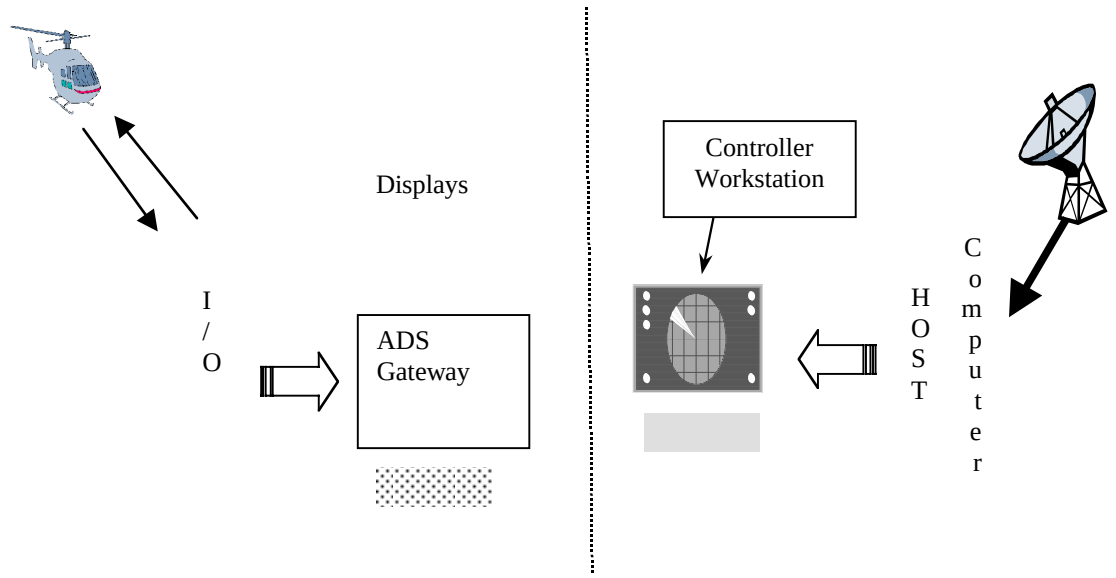

Figure 5-2 ADS Gateway Functionality Provides Flexible Interface to HOST Computer

As shown in the figure, the gateway is introduced initially as a stand-alone system. This generally facilitates the gateway's introduction into the facility while also minimizing potential issues associated with interfacing to the Host computer. The stand-alone configuration also allows realistic data to be collected and evaluated against existing systems and procedures since these remain unchanged initially. A functional example of an existing gateway developed by ARINC that is operational today is shown in Figure 5-3.

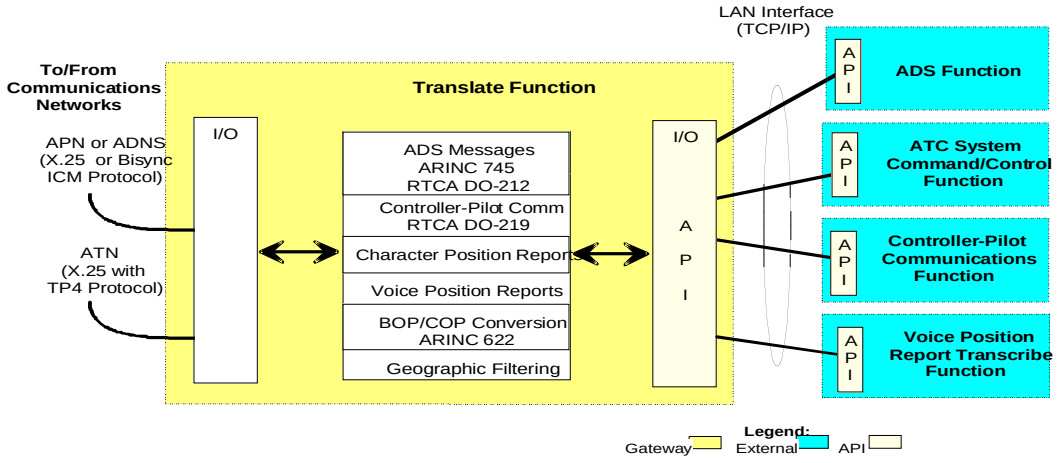

Figure 5-3 ARINC CNS/ATM Gateway Functional Structure

Basically, the gateway serves as a bridge between current and future air/ground communications networks and ATC message application formats. In the ARINC implementation the gateway accepts messages from aircraft in various formats using multiple communications interface options. Messages are reformatted into standard data formats for delivery to ATC end systems using a common applications programming interface (API*).*

[Note: In the stand-alone configuration the end system application functions may run on the same work station processor(s). Currently the ARINC CNS/ATM Gateway runs on IBM, DEC Alpha, Sun, and Hewlett Packard workstations. It has also been integrated with the Lockheed Martin MicroEARTS™.]

The gateway functions connect to their peer applications (i.e., end system functions) via the APIs. Each API is written in the C programming language, and C libraries that include the APIs are available to end system users to help expedite interfacing to the gateway. Besides the data link functions the gateway also has API functions that enable the situational display of selected geographical areas for performing air traffic control functions.

For Houston Center, given the diverse operations to be supported (i.e., high altitude oceanic and low altitude offshore), it is likely that surveillance data will be provided by a mixed communications media and message format environment that will exist for some time. This environment can be expected to include voice and data communications systems that use VHF, HF, and Satcom. It can also be expected to include standard and possibly non-standard message protocols and formats (e.g., data from proprietary tracking systems that may be used by the helicopter operators and forwarded to the Center). Sources of position data are likely to include radar, ADS, ADS-B, voice reports, and others (e.g., Flite Trak and similar proprietary products).

In this mixed environment situation a gateway system approach is almost a necessity to be able to interface with and manage all of the multiple data paths involved. For example at Houston Center, this could include the gateway receiving radar and flight plan data from the Host computer system (initially through the PAMRI interface and later using the en route communications gateway, when available). Voice reports could be received as they are today but with the additional possibility of being forwarded to the gateway operator to be entered into the gateway via a voice transcription function that would allow the display of both data-link-equipped and non-data-link-equipped aircraft. Similar interfaces for position data provided by VHF, HF, and Satcom data link systems could also be accommodated by the gateway system.

However, due to interface capacity issues associated with the PAMRI in the near term (i.e., until the en route communications gateway is available), it is doubtful that the number of external interfaces needed for these data link systems can be accommodated. In this case consideration could be given in the near term to directly interfacing these data link systems to the gateway (e.g., inputs received over phone lines from helicopter operations centers or ground/ground communications networks associated with remotely located VHF, HF and Satcom ground stations). Then, depending upon the level of operational approval granted, the data could be displayed only locally at the gateway (as part of a stand-alone demonstration system) or some or all of the data could be forwarded to other locations within the Center for use as deemed appropriate. This would also allow experience to be gained with handling and integrating data

link information at the Center as well as provide a platform for computer/human interface (CHI) and decision support system (DSS) issues to be addressed.

5.5 ADS-A Avionics Considerations

As noted earlier, most of the ADS-A avionics have been developed for air transport category aircraft and not helicopters (i.e., Boeing and Airbus FANS 1/A avionics). The major exception being the Satcom-based (i.e., uses Inmarsat-L) M-ADS system discussed in Section 4. Other non-standard (i.e., from an ICAO ADS definition perspective) position reporting systems exist and generally use proprietary technology and message formats to provide the position data. The existing Flite Trak system used by Chevron is an example as is a new system that Chevron is evaluating from Newcomb Communications, Inc. This new system is based on a low power, spread spectrum transceiver that operates at L-band satellite frequencies to provide two-way asynchronous data communications. The unit is just entering production and must still receive an STC. However, it is reported to be relatively inexpensive (i.e., in the $10,000 dollar range).

The M-ADS by contrast has an STC and is currently in use in airspace operations. However, its cost is reported to be over $100, 000. Most of this cost is reported to be for the satellite transceiver hardware. The M-ADS unit itself was designed to accommodate other air-ground ATN compatible subnetwork data link interfaces (e.g., VHF). However, these are reportedly not fully implemented at this time.

Other systems were identified during the course of this study as having possible application to helicopter position reporting. However, the full extent of this potential utility was not able to be determined during the time frame of this study. These systems include a helicopter HF transceiver system (the KHF 990) manufactured by AlliedSignal. This is a $40,000 system and has an automatic link establishment (ALE) function that can support transmission and receipt of 90-characrter data messages. The ability to interface with other on-board avionics for source data for these messages could not be determined from discussions with the AlliedSignal representative.

In the VHF area, Magellan has been developing hardware that integrates a GPS receiver with a VHF data link (i.e., ACARS) to provide a flight following capability. These units are reported to be in the $10,000 to $20,000 range. Although some demonstration tests have been conducted, these units are not in production and there future is uncertain at this time. Other similar systems may be introduced by other manufactures in the near future.

Integration of the ADS-A avionics has issues similar to those encountered with ADS-B avionics (discussed in detail in section 8). Interfaces to the source data and antenna placement are primary concerns. The antennas and cabling could be of more concern for the Satcom-based systems due to the low signal levels involved and the general nature of satellite communications.

The question then arises as to what ADS system should be pursued to help address surveillance requirements of low altitude helicopter operations in a non-radar environment. Cost and technical considerations associated with the various current ADS avionics candidates as well as the on-going FAA activities to upgrade the en route architecture and infrastructure at all of the

ARTCCs, including Houston Center, prevent any clear answer to this question at this time. However, several factors need to be considered to make progress in this area. The first is that ADS requires compatible functionality both in the aircraft avionics and in the ground applications processor for the system to work. Next, non-equipped or mixed-equipage aircraft will comprise the operational environment for some time to come. Additionally, the operational procedures and support tools associated with data link and ADS are still evolving. The latter implies that changes to DSS algorithms and CHI are likely. In this situation it is important to have a ground system capability in place that can provide the flexibility to satisfy the different and changing interface and processing requirements that will occur during the evolution and initial introduction of new surveillance data sources. However, it is equally important to allow the capabilities of the existing systems to be sustained.

Therefore, the initial ADS emphasis should be on providing strong capabilities for a gateway system at Houston Center that can process reports from whatever position reporting systems are installed in the helicopters. Initially, the specific ADS system used is less important than the availability of position reports to support the overall air-ground ADS process development. In the near term transcribed voice reports along with Flite Trak data provided by phone line from Chevron's operations center could serve as the basis for an initial demonstration for the processing and display of new data sources. As more and different data sources become available, these could be included and used to build upon and gain needed experience with data integration and information display, data link operational procedures, and CHI.

5.6 Other Considerations

Issues associated with performance, costs, and standards development status are all factors that affect the selection and commitment to use a particular technology for a specific application at any given point in time. Decisions are made based on trade-offs that are usually unique to each potential user. In these circumstances then it is important to have an overall architecture that is OSI based, which the CNS/ATM architecture is. This enables compatible technology developments for both airborne and ground portions of CNS/ATM systems to progress and be available for use whenever the cost/benefit analysis thresholds are met.

A strong case can be made for an evolutionary approach based on open system architecture standards to take advantage of the technologies, and the capabilities they provide, whenever the individual cost/benefit thresholds can be met. This approach is based upon the state of technology and its direction of evolutionary development, the diverse and unique cost considerations of interest to each operator, and the on-going "validation" and acceptance activities of the CAAs. This concept is already in use in the initial development and operation of FANS 1/A ADS.

The implementation of FANS 1/A aircraft and the installation of corresponding ground workstations at a number of ACC's around the world have illustrated the viability of data communications for ATS functions in remote and oceanic airspace. ADS has proven to be a significant advantage to controller situational awareness over periodic voice position reporting. However, the issues of human machine interface have also proven to be problematic when that interface is not sufficiently intuitive to the controller community.

Based on experiences gained from current implementations (e.g., M-ADS, airlines) some observations can be made on technology areas that would have major benefits when available. These include:

- Low cost satellite transceivers,
- Small, low cost, steerable antennas to provide high data rate satellite links for smaller, non-air carrier aircraft, and
- Ground automation modules based on common standards (both components and interfaces) to better capture good human machine interface designs and support their transfer to new applications instead of inventing new and non-standard (i.e., proprietary) designs.

6.0 ADS-B OPERATIONAL CONCEPT

6.1 Overview of Development of ADS-B

The concept of using CDTIs has been around since the 1940's [12]. Many early concepts assumed that the secondary radar, through a TIS-B type of implementation, would provide the traffic information. The development of the Mode S secondary surveillance radar system introduced the concept of having an airborne data link capability available in the aircraft. In the late 1980's and early 1990's, the widespread introduction of TCAS in large and medium commercial aircraft allowed pilots to become familiar with traffic situation displays. The availability of a data link and the traffic situation display led some aeronautical visionaries to conceive of using the two concepts together in a real-time, air-to-air, exchange of position information and display of traffic to provide benefits to users. Some of the applications envisioned include:

- Station keeping (e.g., maintaining en route separation, in-trail climb and descent procedures, separation in closely spaced approaches),
- Enhanced TCAS (e.g., using the other aircraft's navigation information to provide more accurate and timely separation and threat information), and
- Improved situational awareness by knowing the relative location of other aircraft (both in the air and on the airport surface).

6.1.1 MIT Lincoln Laboratories

In 1992, the Massachusetts Institute of Technology (MIT) Lincoln Laboratories (developers of Mode S) conceived the concept of encoding the GPS position of one's own aircraft into the squitter signal sent out from the aircraft's Mode S transponder [13]. The nominal 56-bit Mode S squitter message, which contains the aircraft's address, was extended by another 56 bits. In this second 56-bit message, aircraft position information (derived from GPS, the altimetry system, and other airborne instrumentation) was broadcast through the Mode S extended squitter. The concept was first named GPS-squitter. Later, as the concept was extended to other data link implementations, the concept became known as automatic dependent surveillance – broadcast, or ADS-B.

Lincoln Labs performed several tests of this concept for both airborne and airport surface surveillance applications. These tests were performed at Hanscom Field near Boston, MA. Subsequent tests were performed in the Gulf of Mexico and the concept was demonstrated to work on helicopters. These initial tests were performed in an air-to-ground mode with the envisioned application being improved surveillance capability in remote areas like the Gulf of Mexico. Reception ranges of 35 to 40 nm for helicopters flying at altitudes of 500 to 700 feet were demonstrated in the Gulf tests. These results were consistent with predicted slant range performance for L-band signals.

6.1.2 The 1996 Olympic Games – ARNAV Systems

Other early developers of aviation broadcast systems included ARNAV Systems of Puyallup, WA. Through their participation in NASA's Advanced General Aviation Transport Experiment (AGATE) program, ARNAV developed a data link system called Geolink. Geolink was based on a proprietary data link design and included several functions including ADS-B. Through AGATE, ARNAV became the supplier of ADS-B equipment that supported surveillance of helicopter and other aircraft traffic during the 1996 Olympic Games in Atlanta, GA. This project was known as Operation Heli-STAR.

The initial criteria identified by the planners of Operation Heli-STAR was the need to provide communications, navigation, and surveillance services for approximately fifty helicopters to support security and surveillance operations, emergency services, and cargo hauling operations for the duration of the Olympics. The ADS-B system was an engineering prototype assembled from commercial off-the-shelf hardware and integrated into an operable system capable of meeting Operation Heli-STAR requirements.

Heli-STAR and AGATE planners jointly identified five primary ADS-B functions as necessary to support the wide range of helicopter operations. These consisted of:

- ADS-B (automatic dependent surveillance - broadcast),
- CDTI (cockpit display of traffic information),
- FIS-B (weather information - broadcast),
- CPDLC (controller/pilot data link communications), and
- EPiREP (electronic pilot reports).

These functions were given weighted merit during system design deliberations as to their utility for meeting Operation Heli-STAR needs. The large-scale deployment of aircraft in an operational demonstration, during an event like the Olympics, afforded the unique opportunity to exploit the capabilities this new technology and to address issues of concern in the development of a national free-flight infrastructure.

Initial plans were to install between 40 and 50 ARNAV ADS-B airborne systems on helicopters that would be operating in the Atlanta area during the Olympic Games. These were to be complete installations in accordance with FAA requirements. However, security concerns led to a last minute requirement to equip all aircraft operating in the vicinity of the Olympic Games with ADS-B capability. ARNAV quickly developed a portable version of their system that was battery operated and could be installed without any permanent connections on the aircraft. Data link antennas were mounted internally on the windows on each of the aircraft and the GPS antenna was mounted on the aircraft's windshield. Tests at FAA's Technical Center demonstrated that this equipment could provide ADS-B signals that could support operations during the Olympic Games. In all, 35 aircraft had permanent installations and 48 aircraft had portable installations.

The Atlanta airspace proved to be quite challenging. Important and common to all operations was the requirement for controllers to track and monitor the location of participating aircraft as

they performed their individual missions. Participating helicopters flew in controlled and uncontrolled airspace. The area over the Olympic Village and Olympic venues was subject to temporary flight restrictions. Most of the operating airspace in the Atlanta area was outside or below the Class B airspace. All flights arriving and departing two general aviation fields (DeKalb Peachtree Airport and Charlie Brown Airport) were inside of Class D airspace, as was most of the route structure. Complicating the surveillance requirement was the fact that the helicopters would be flying below radar coverage from the two nearby air traffic surveillance radars, located at Atlanta Hartsfield Airport (seven miles south) and Dobbins Air Reserve Base (10 miles northwest). Tracking of the aircraft was needed from the earth's surface up to approximately 1,500 feet for the typical mission profile. Conventional radar only allowed tracking down to approximately 1,800-2,000 feet over the city and major venues.

The traffic information derived from ADS-B was displayed in the traffic advisory center (TAC) on consoles designed and built by the Harris Corporation of Melbourne, FL. Controllers viewed the aircraft movements on these displays, monitored the traffic situation, and issued traffic advisories based on the available information. All operations were conducted under VFR.

The ADS-B elements of Operation Heli-STAR proved to be extremely useful in managing air traffic and providing traffic advisories during the Olympic Games. As displayed on the Harris consoles at the TAC, the track data and update rates of the aircraft with the permanent installations appeared to be more reliable than the track data and update rates of the aircraft with portable installations. This was as expected since the permanently installed ADS-B system was designed for much greater reliability than was the portable system. It was expected that the signals from the portable units would be blocked from the ground receiving antennas by the aircraft structure during some portion of their flight.

6.1.3 FAA's Safe Flight 21 Program

After the successful demonstration of ADS-B at the Atlanta Olympics, the FAA sought to identify areas of the country where ADS-B capability could be further developed and demonstrated. It was thought that the desired demonstration area should:

- Have a demonstrated need to have improved ATM services, and
- Be somewhat isolated from areas of the country having high density air traffic to simplify NAS interfaces.

After some initial consideration of Hawaii and Alaska, the area in the western mainland of Alaska near Bethel was selected as an ADS-B development site. Alaska has a much higher accident rate than the rest of the United States. It is believed that ADS-B can address many of problems affecting Alaska's accident record. The project was given the name Capstone. At approximately the same time period, the Cargo Airline Association (CAA) became interested in applying ADS-B to support TCAS requirements for their fleets. The CAA began a development program for ADS-B and they selected the Ohio Valley area as the flight demonstration area. In order to provide program management support to these programs and to ensure that they would provide useful information to other FAA programs, such as Free Flight, the FAA placed both

Capstone and the Ohio Valley Program under their Safe Flight 21 program. Safe Flight 21 intends to demonstrate nine operational enhancements. They are:

- Weather and other information in the cockpit,
- Affordable means to reduce controlled flight into terrain (CFIT),
- Improved capability for approaches in low visibility conditions,
- Enhanced capability to see and avoid adjacent traffic,
- Enhanced capability to delegate aircraft separation authority to the pilot,
- Improved capability for pilots to navigate airport taxiways,
- Enhanced capability for controllers to manage aircraft and vehicular traffic on the airport surface,
- Surveillance coverage in non-radar airspace, and
- Improved separation standards.

6.1.3.1 Ohio Valley Tests – Cargo Airline Association

The following information is taken from the Request for Information (RFI) for Non-CAA Participation in CAA's ADS-B Operational Evaluation [14].

Background

The Cargo Airline Association (CAA) is an industry trade organization representing numerous cargo airlines and associate industry members. In an effort to achieve improved separation tools over those currently available, in 1996 the CAA began a program to develop a collision avoidance system based on ADS-B technology. The CAA ADS-B program consists of three phases. Phase 1 addresses enhanced situational awareness functions. Phases 2 and 3 pertain to conflict detection and resolution functionality.

The objective of Phase I is fleetwide deployment on CAA aircraft of a CDTI for use as a pilot aid in visual acquisition of other traffic and increased situation awareness in all phases of flight. The CDTI will use an ADS-B data link, the configuration of which is to be selected from three comparable technologies: Mode S transponder (1090 MHz), Universal Access Transceiver (UAT) (966 MHz) and VHF Data Link (VDL) Mode 4. In order to provide adequate supporting data for such a selection, Phase I has been designed with two main components: Phase I Initial and Phase I Fleetwide. During Phase I Initial, numerous evaluations will be conducted in the laboratory, simulator and in-flight scenarios. Phase I Fleetwide will use the results of Phase I Initial to deploy a mature system on CAA aircraft beginning in 1999.

During Phase I Initial, the CAA will conduct two flight evaluations: an in-service evaluation (ISE) and an operational evaluation (OpEval). The ISE will consist of 12 CAA member aircraft using an ADS-B based CDTI during revenue operations. The primary focus of ISE is assessment of the CDTI in use for "enhanced see and avoid" operations. In order to provide a more realistic environment for assessment of enhanced ADS-B applications, an OpEval will be held one weekend in mid-1999 at the Airborne Express hub in Wilmington, OH. It is expected that all 12 ADS-B equipped CAA aircraft will participate in various ground and flight maneuvers to provide operational capability, human factors, and data link performance assessments. The CAA

is currently developing the OpEval Flight Test Plan and would like to consider involving organizations outside the CAA to participate.

The overall objectives of the CAA ADS-B Program are:

- Increase flight safety by providing flight crews with a flight deck display that greatly increases crew situation awareness,
- Significantly increase operational capacity and service efficiency by providing the flight crew more accurate information for use in VMC during terminal area operations,
- Provide an avenue for potential ADS-B data link comparison and selection based on suitability for operational enhancements and radio frequency (RF) performance criteria,
- Accelerate the development of an ADS-B based system for airborne separation assurance that allows for conflict detection and resolutions at distances far in excess of those systems currently available, and
- Provide the opportunity to evaluate the cost and operational benefits of additional user services made possible through application of ADS-B technology.

UPS Aviation Technologies (formerly known as the II Morrow Corporation) is developing the ADS-B airborne equipment. It has developed a highly integrated Link Display Processing Unit (LDPU) that consists of:

- GPS receiver,
- 1090 MHz receiver,
- 966 MHz UAT, and
- Processing functions for the CDTI.

The CAA avionics configuration also consists of the following additional components:

- VDL Mode 4 Self Organizing Time Division Multiple Access (STDMA) transceiver,
- Mode S transponder with extended squitter capability,
- CDTI control panel,
- CDTI display,
- GPS receive antenna – top,
- 1090 MHz receive antenna – top and bottom of aircraft,
- UAT receive/transmit antenna – top and bottom of aircraft, and
- VDL Mode 4 receive/transmit antenna – bottom of aircraft.

6.1.3.2 Capstone Program – FAA Alaska Region

The following information is taken from the Capstone website on the Internet [15].

The Capstone Program is a joint industry and FAA Alaskan Region effort to improve aviation safety and efficiency by putting cost-effective, new-technology avionics equipment into aircraft in the Yukon-Kuskokwim delta region near Bethel on Alaska's west coast. This demonstration area is a non-radar environment with most of the air carriers' operations being limited to VFR. Capstone will equip up to 200 of the aircraft used by commercial operators in the area with a

government-furnished GPS-based avionics package. In addition to the avionics suites, Capstone will deploy a ground infrastructure for weather observation, data link communications, surveillance, and Flight Information Services (FIS). Capstone will also increase the number of airports served by an instrument approach.

A significant number of mid-air collisions, controlled flight into terrain, and weather-related accidents can be avoided with new technologies incorporated in the Capstone avionics package. The Capstone program will provide real world information and experience as well as enhanced safety and operational capabilities that can be used to improve the National Airspace System.

Phased installation of Capstone equipment will begin in 1999. An operational demonstration is planned for the summer of 1999.

Highlights

The Capstone Program provides weather (text and graphics) directly to the pilot in the cockpit through the new Flight Information System (FIS)

Installation of new automated weather systems enables commercial operators to perform GPS approaches to airports in the Yukon-Kuskokwim area

Introduction of a modern data link network allows participating pilots to see aircraft traffic via a CDTI to aid in collision avoidance

An interface with the existing radar tracking system allows pilots of Capstone-equipped aircraft to see radar and ADS-B targets via TIS-B for nearby aircraft

Aircraft selected for the Capstone Program receive:

- IFR-certified GPS navigation receiver (meets the requirements of Technical Standard Order (TSO) C129A Class A1),
- ADS-B transmitter/receiver,
- Multi-function color display with traffic and terrain advisories,
- FIS providing weather, special use airspace status, wind shear alerts, notices to airmen (NOTAMs), and pilot reports (PIREPs),
- TIS-B providing radar traffic information,
- Terrain database, and
- IFR database.

The FAA is providing funding and technical/operational support to the Capstone Program. Equipment to support the Capstone Program is being procured from avionics suppliers via a bid process. In June of 1999, the Capstone Program selected UPS Aviation Technologies as their aviation equipment contractor. According to a recent news release [16], they will use the UAT data link to provide ADS-B services. UPS Aviation Technologies is also the equipment supplier for the Ohio Valley tests, which was discussed in the pervious section. They are scheduled to perform an operational demonstration later in the summer of 1999.

6.1.4 European ADS-B Programs – NEAN, NAAN, NEAP, and NUP

European ADS-B efforts have been directed primarily at using the VDL Mode 4 data link. The ground infrastructure to support ADS-B efforts are being developed in the NEAN, a follow on program to NEAN called the NEAN Update Program (NUP), and the North Atlantic ADS-B Network (NAAN).

The NEAP is investigating the applications of ADS-B using VDL Mode 4/STDMA technology. NEAP is a joint program with the German, Swedish, and Danish civil aviation authorities, and Lufthansa and SAS airlines. The NEAP evaluations are focused around five locations:

- Frankfurt Airport, Frankfurt, Germany;
- Arlanda Airport, Stockholm, Sweden;
- Angelholm Airport, Angelholm, Sweden;
- Tyra oil rig, Copenhagen Air traffic Control Center, Denmark; and
- Langen Air Traffic Control Center, Germany.

Initially, ADS-B equipment is being installed on the following aircraft:

Aircraft	Airline	Number
Boeing 747	Lufthansa	6
Boeing DC-9	SAS	2
F28-4000	SAS	2
Aerospatiale Super Puma	MAERSK	1
Dornier 228	DLR	1

The following applications are being evaluated in NEAP:

- Air Terminal Information Service (ATIS) – Broadcast (ATIS-B),
- On-ground situational awareness and taxi guidance,
- Runway incursion,
- Enhanced ATC surveillance – down link of aircraft parameters,
- In-flight situational awareness,
- Extended surveillance for helicopter operations,
- GNSS precision navigation capability for en route and approach, and
- TIS-B service.

6.1.5 RTCA SC-186

Much of the work in developing ADS-B standards is now ongoing in RTCA SC-186. The working group structure was reorganized at SC-186's February 1998 plenary meeting. The structure was changed from two working groups that developed the Minimum Aviation System Performance Standards (MASPS) (WG-1 Operational Requirements, and WG-2 Technical Requirements) to the structure shown below. The names and terms of reference for each working group continue to change as concepts mature, and the needs become better defined and

understood. The work of this RTCA Special Committee is being coordinated with the efforts of EUROCAE's Working Group 51 to assure consistency in international standards for ADS-B.

- Working Group 1 - Operations and Implementation Working Group
  - Subgroup - Enhanced Visual Acquisition / Near Term Applications (i.e., CAA Phase 1 efforts)
  - Subgroup - Applications (currently addressing primarily separation assurance operations concepts)
  - Subgroup - Closely Spaced [independent] Parallel Approaches
  - Subgroup - Paired [dependent] Parallel Approaches (United Air Lines ADS-B concept for approaches to San Francisco's parallel runways (750 ft separation) during periods of reduced ceiling conditions)
  - Subgroup - Human Factors (SAE G-10 Committee Interface)
  - Subgroup - Cockpit Display of Traffic Information MOPS
  - Subgroup - Conflict Detection & Resolution
- Working Group 2 - Separation Assurance Architecture Working Group *[Note: This working group has never met and is not likely to as other groups (e.g., Free Flight Select Committee subgroup on Surveillance) are addressing its intended topic – the surveillance architecture context in which ADS-B must function.]*
- Working Group 3 - ADS-B 1090 MHz MOPS Working Group
- Working Group 4 - Tactical Alerting and Avoidance Working Group
  - Subgroup 1 - TCAS enhancements
  - Subgroup 2 - ADS-B based collision avoidance
  - Subgroup 3 - Requirements Analysis

The organizational structure is somewhat "alive" and continues to evolve, so more changes are likely.

6.2 ADS-B Avionics Requirements for Evaluating Air-to-Air Operations

Important considerations when specifying the avionics equipment appropriate to the NASA experimental program include not only the functional aspects of the job to be performed, but the practicalities involved in installing a workable avionics complement. These considerations are complicated by the fact that there may be necessary functions for which there are currently no suitable off-the-shelf components available. Other complications include the need to minimize impact on the certification of the aircraft for normal VFR flight, minimize weight and size, minimize installation complexity, and of course, to minimize cost.

The following paragraphs describe those requirements that the research team determined were important for the development of NASA's rotorcraft ADS research capability. The reasearch team coined the phrase "Research in Rotorcraft ADS" or RRADS to describe the rotorcraft ADS concept architecture.

6.2.1 RRADS Functional Requirements

Components shall be provided to perform the following functions or have the following capabilities:

FunR-1. Receive GPS position, velocity and time;
FunR-2. Provide GPS parameters on a suitable bus for 1) 1090 MHz squitter, 2) ADS-B traffic/threat detection, and 3) test data logging;
FunR-3. Provide encoded altitude for 1) ship's transponder, 2) 1090 MHz squitter, 3) ADS-B traffic/threat detection, and 4) test data logging;
FunR-4. Transmit Mode S 1090 MHz DF-17 format squitter at a suitable power level to be received by an aircraft at a range of 10 nm in any direction;
FunR-5. Provide omnidirectional 1090 MHz reception function, filtering all but Mode S DF-17 format messages;
FunR-6. Provide Mode S received data on a suitable bus for 1) ADS-B threat detection, and 2) test data logging;
FunR-7. Perform ADS-B traffic identification and threat detection;
FunR-8. Provide identified traffic/threat data on a suitable bus for 1) cockpit display, and 2) test data logging;
FunR-9. Display traffic/threat data on suitable device (alphanumeric display and/or CDTI);
FunR-10. Accept pilot inputs for system operating parameters;
FunR-11. Provide input parameters on a suitable bus for 1) control of traffic/threat detection functions, and 2) test data logging;
FunR-12. Provide technician console to operate traffic/threat module and test data logging function;
FunR-13. Provide test data logging capability;
FunR-14. Provide an open system architecture so that the configuration of the traffic/threat module and display can be modified easily to satisfy NASA's research objectives; and
FunR-15. Have growth potential to allow for a progression of increasingly complex processing functions beginning with enhancing the pilot's situational awareness (using CDTI) and progress to conflict detection and resolution (e.g., display of real-time maneuver and intent data), collision avoidance, and station keeping.

6.2.2 RRADS Physical Requirements

To the maximum extent possible, each component shall:

PhyR-1. Have size and weight and power requirements consistent with equipment normally found in modern general aviation aircraft,
PhyR-2. Operate on available aircraft power (preferably 28 Volts DC) or be self-powered,
PhyR-3. Be designed for standard aircraft mounting (in avionics tray or on standard panel Dzus mounting rails),
PhyR-4. Be capable of withstanding normal range of aircraft temperature, vibration and accelerations, and
PhyR-5. Not emit objectionable electromagnetic interference (EMI) or be susceptible to EMI.

6.2.3 RRADS Certification Requirements

To the maximum extent practicable, each component shall:

CertR-1. Meet the TSO applicable to that type of avionics equipment, if such a TSO exists;
CertR-2. Match, as closely as possible, the standards of draft or final RTCA MOPS or MASPS applicable to that type of equipment, if a TSO has not yet been adopted;
CertR-3. Where no such standards exist, meet the STC requirements for secure mounting and non-interference with other aircraft systems or with the operation of the aircraft;
CertR-4. To the extent possible, the equipment should allow the aircraft to operate within the General Operating Rules (14CFR Part 91) of the FARs. Avoid, to the extent possible, the requirement to operate the aircraft in Experimental Category; and
CertR-5. Have growth potential to allow researchers to investigate regulatory and certification issues such as human-machine interface (e.g., pilot workload measures), procedures development, ATM, and equipment certification (e.g., end-to-end verification of data passing through the system).

6.2.4 RRADSProcurement Requirements

To the extent practical, each component shall:

ProR-1. Be in the manufacturer's stock configuration, given the intended function to be performed,
ProR-2. Minimize the amount of software and hardware modifications required of the avionics manufacturer, and
ProR-3. Minimize the requirement for post-delivery modifications of the equipment performed by the research team that is outside the scope of the research elements of the equipment.

[Note: Some or all of the hardware and software for the traffic/threat detection unit, the pilot control/display, and the technician station and test data logging device may be specially constructed for this program, or developed under other research programs]

6.3 RRADS Requirements from RTCA ADS-B MASPS

Detailed descriptions of the requirements for ADS-B are contained in the RTCA MASPS [1], "Minimum Aviation System Performance Standards for Automatic Dependent Surveillance Broadcast (ADS-B)," Document No. RTCA/DO-242, February 19, 1998, prepared by Special Committee 186. Sections 2 and 3 of this document present comprehensive requirements for anticipated ADS-B applications in the National Airspace System. Section 2 of the MASPS presents Operational Requirements and Section 3 presents ADS-B System Definitions and Requirements, which defines ADS-B within the context of the operational requirements and develops functional and performance requirements.

Many of these operational requirements map directly into applications of ADS-B for rotorcraft operating in a remote environment like the Gulf of Mexico while other requirements are not

applicable to rotorcraft or do not fit within the context of the research capability NASA seeks to establish.

The requirements that are most apparently not applicable to rotorcraft are those developed from high speeds and high altitude operations typical of transport category fixed-wing aircraft. Their operational requirements often lead to performance requirements for operational ranges of 40 to 120 nm. It would appear that most helicopter operations in an area like the Gulf of Mexico would need an operational range of about 10 nm. Even two high performance helicopters approaching each other at speeds of 150 knots, ADS-B equipped aircraft could see each other 2 minutes prior to a head on collision with a 10 nm range capability. With growth anticipated in civil tiltrotor operations, two tiltrotors approaching each other at 250 knots each would have 72 seconds prior to collision. Perhaps with tiltrotors the range should be increased to 20 nm to account for this eventual possibility. However, for the purposes of developing requirements for RRADS, an ADS-B range of 10 nm seems adequate for the foreseeable future.

This range capability corresponds to an ADS-B capability somewhere in the A0 to A1 range as defined in DO-242. An A0 system has a range capability of 10 nm and the functional capability of an aid to visual acquisition. An A1 system has a range capability of 20 nm and a functional capability of conflict detection, conflict resolution, and collision avoidance. It would appear the helicopter requirement should have the range capability of an A0 system and the eventual performance capability of an A1 system. The tiltrotor requirement should fit comfortably in the A1 system category.

6.4 Other RRADS Applications

The RRADS requirements developed herein apply equally well to the low-end general aviation user. These users typically fly at low altitudes (below 10,000 feet), under VFR, at airspeeds less than 180 knots, and outside of continuous surveillance radar coverage. These aircraft also operate to and from small airfields that often do not have ATC towers. The cost and operational objectives of rotorcraft and general aviation users are very similar and quite compatible with RRADS requirements. Therefore, it is believed that the RRADS architecture is also appropriate for a corresponding general aviation research capability.

7.0 RRADS SYSTEM ARCHITECTURE

Based upon the review of ADS-B system concepts that had matured to the point of equipment development and testing (Section 3), a series of discussions were undertaken with research and development firms and avionics manufacturers who had experience with ADS-B. These discussions included topics such as product descriptions, component interfaces, availability of equipment and technical support, and component costs. In summarizing the findings of this effort, the following observations became apparent.

1. ADS-B is still in an evolutionary state of development. Operational test and evaluation efforts are ongoing (Ohio Valley tests, Operation Capstone in Alaska, and European test and evaluation efforts). As of this time there is not a consensus as to the ultimate architecture for ADS-B. Efforts are underway to develop industry standards through RTCA SC-186 and EUROCAE WG 51, but these efforts will not be complete for some number of months. After these industry groups have completed their work, the civil aviation authorities will then have to further extend the industry standards to regulatory standards. The civil aviation authorities will also have to develop and validate flight procedures using ADS-B equipment. The subject rotorcraft ADS research capability, RRADS, could be a useful tool in supporting government and industry efforts to introduce ADS-B into the NAS.

2. Some manufacturers have complete ADS-B system architectures that could be used for RRADS. Two ADS-B architectures that were considered are the UPS Aviation Technologies system, which is undergoing testing in the Ohio Valley, and the ARNAV system that was used to support helicopter operations at the 1996 Atlanta Olympic Games. These complete ADS-B systems have the following general characteristics:

- Both systems have the advantage of being complete, integrated systems that could perform ADS-B functions in rotorcraft,
- The UPS Aviation Technologies system is designed to meet air carrier requirements,
- The ARNAV system is designed to meet the requirements of general aviation (GA), including rotorcraft,
- The UPS Aviation Technologies system is configured to use a variety of data link mediums – Mode S squitter, Universal Access Transceiver, and VHF Data Link Mode 4,
- The ARNAV system uses a data link that is proprietary to the manufacturer, and
- Both systems have a closed architecture in their ADS processing and display units. This limits the flexibility to change or modify software configurations for research purposes.

Clearly, for RRADS, the last item is a significant disadvantage. This constraint limits the flexibility of integrated ADS-B systems for research purposes. For this reason it was deemed desirable to synthesize an ADS-B system with a more open architecture, particularly in the processing and display components.

7.1 Candidate RRADS Architecture

The RRADS architecture depicted in Figure 7-1 is configured to meet the requirement for rapid and flexible reconfiguration of the Pentium processor and display units. The components are as follows:

- GPS receiver,
- Mode S transponder configured for extended squitter capability,
- 1090 MHz receiver configured to process Mode S extended squitter,
- Pentium processor,
- CDTI display, and
- Technician control/display unit.

Interfaces to other aircraft systems:

- Altitude-encoding altimeter, and
- Compass system.

In the RRADS architecture shown in figure 7-1, the GPS receiver provides aircraft state vector, flight plan data, and GPS time to the Pentium processor. This interface may be through an RS 232C or ARINC 429 connection. Figure 7-1 also shows a barometric altitude input to the Pentium processor. The Pentium processor formats the state vector, barometric altitude, flight plan information, and an aircraft address according to the requirements of the Mode S transponder and provides this information to the transponder through an ARINC 429 serial bus.

An alternative RRADS architecture, for GPS receivers that have an ARINC 429 serial bus output, is to connect the GPS and the barometric altitude source directly to the Mode S transponder. The connections from the GPS receiver and the barometric altitude sources to the Pentium processor are still required for the CDTI functional processing and data logging.

The Mode S transponder receives information from either the Pentium processor or the GPS receiver, prepares the extended squitter message, and transmits the message on the 1090 MHz output signal. The 1090 MHz signal must be routed alternately to the upper and lower Mode S L-band antennas. If the transponder has been designed to accommodate two antennas (e.g., Collins TDR-94D), then the antenna connection is straightforward. If not, some method of switching between the top and bottom aircraft antennas must be accommodated. It is suggested that this topic be discussed with the transponder supplier prior to acquiring the unit.

On the receiving side of the ADS-B architecture, the 1090 MHz signal appears on either (or both) of the L-band receiving antennas. The RRADS architecture, as shown in figure 7-1, indicates that two separate 1090 MHz Mode S receivers are necessary. This is true unless the receiver is capable of handling inputs from two antennas (e.g., Ryan TCAD 9900A). In this case, a single receiver capable of handling inputs from two antennas is all that is required.

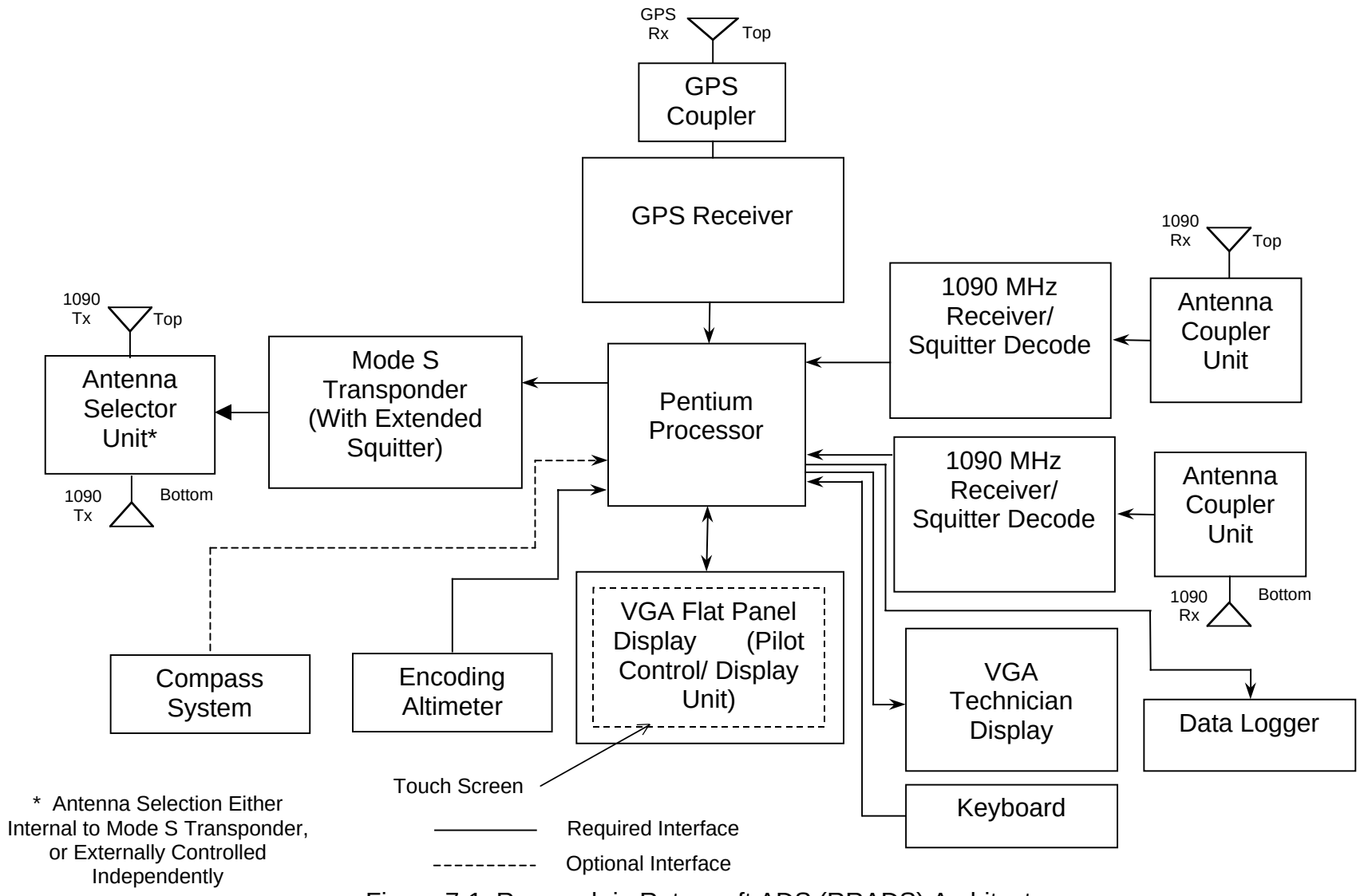

Figure 7-1 Research in Rotorcraft ADS (RRADS) Architecture

The receiver(s) accept and decode the input Mode S waveform. The receiver detects the regular Mode S message and the DF-17 data contained in the extended squitter. This information is then passed to the Pentium processor through a RS 232C connection.

A connection from the aircraft compass system to the Pentium processor is shown in the architecture. Information from the compass system is desirable as a part of the CDTI processing functions. In particular, it allows for heading information to be displayed on the CDTI and allows for a "heading up" mode when orienting the CDTI presentations.

However, some small helicopters may not have a suitable electrical source of heading for input to the Pentium processor. In these cases, track information may be derived from changes in the latitude/longitude position of the aircraft when it is in motion. However, it should be recognized that factors like winds and magnetic variation might cause the calculated track to be different from the heading information available from the compass system.

[Note: The RRADS capability defined herein should be capable of operating in both the heading and track modes of operation. The research capability should provide investigators with the ability to perform comparisons of operating in each mode to determine if there is degradation in human operator performance when operating in track mode.]

The Pentium processor is the backbone of the RRADS system. It must perform several functions; these include:

- Input processing
  - State vector from the GPS receiver
  - Flight plan from the GPS receiver
  - Barometric altitude from the encoding altimeter
  - Magnetic heading from the compass system
  - Extended squitter messages from the top Mode S antenna
  - Extended squitter messages from the bottom Mode S antenna
  - Inputs from the pilot's touch panel display
  - Inputs for the technicians keyboard
- Output processing
  - State vector, flight plan and address information to the Mode S transponder
  - CDTI information to the pilot's display
  - Test parameters to the technician's display
- Sort and assemble information from other aircraft based on information contained in the extended squitter messages
- Track other aircraft
- Determine state vectors of other aircraft (relative to own ship)
- Determine intent of other aircraft from their flight plan and rate (relative to own ship) information
- Generate display of other aircraft and data tags
- Process own ship parameters for output to Mode S transponder
- Perform data logging for post flight analysis

The pilot's display is shown to be a touch screen display in figure 7-1. Alternative pilot control methods (e.g., knobs and keypads) are possible and perhaps desirable given the research objectives of NASA.

The technician's control and display unit is intended for the technician or flight test engineer to be able to monitor certain test parameters independently of what the pilot is seeing on his/her display. Through this control and display unit, the technician or flight test engineer is able to monitor and/or change certain test parameters while the aircraft is in flight.

A function of the processor also shown in figure 7-1 is data logging. The Pentium processor must be able to store data in a manner that is recoverable for post flight processing.

7.2 RRADS System Components

The components and component interfaces for the RRADS system are described in the following paragraphs.

7.2.1 GPS Receiver Subsystem

A survey of GPS receivers was undertaken to ascertain those receivers that could be used in the ADS-B architecture. Data were obtained for both IFR receivers (those that meet FAA TSO C129A Class A1 certification) and VFR receivers. A summary of the receivers and their data output capabilities is shown in Table 7-1. All of the receivers have some standard interface to other components of the ADS-B system. An analysis of the format of the GPS receiver outputs was performed for three of the receivers. Actual data outputs for the National Marine Electronics Association (NMEA) format (Garmin) and the RS232 format (Trimble and Bendix/King) are presented in Appendix C. These data were taken from flight tests during the helicopter GPS non-precision approach criteria test program [17].

One area of caution should be noted. At the present time, there are no aviation standards that apply to the data outputs of the GPS receiver. Parameters such as latency, resolution and accuracy are not specified. Therefore, the user has no assurance, other than the manufacturer's claims, that these data meet any specified level of performance. RTCA and the aviation industry are aware of this issue and it will be addressed in the near future.

Analysis of the GPS receiver outputs indicates that most, if not all, of the GPS receivers would provide at least a minimum set of suitable aircraft state vector outputs for use by the ADS-B system. As shown in Appendix C, the data parameters and resolution of these outputs can vary widely from receiver to receiver. In the helicopter GPS non-precision approach tests, the Trimble 2100 receiver (the Model 2100 has since been replaced by the Model 2101) had output characteristics that proved useful for flight testing. These characteristics included greater output resolution and the availability of GPS time. These characteristics would also be useful for NASA's rotorcraft ADS-B research capability. Therefore, the Trimble 2101 is the recommended GPS receiver.

Table 7-1 Survey of GPS Receivers

MANUFACTURER	MODEL	Output Data Interfaces			IFR	VFR	TSO
		RS 232 OR RS 422	ARINC 429	NMEA			
Garmin	150/150LX*	YES	YES(LX)	YES(LX)		YES	
Garmin	155/155LX	*YES*	*YES*	*YES*	*YES*		*YES*
Garmin	165	*YES*	*YES*	*YES*	*YES*		*YES*
Garmin	250/250LX	*YES*	*YES*	*YES*		*YES*	
Garmin	300/300LX	*YES*	*YES*	*YES*	*YES*		*YES*
Garmin	430	*YES*	*YES*		*YES*		*YES*
Trimble	2000	*YES*		*YES*	*YES*		*YES*
Trimble	2000A	*YES*		*YES*		*YES*	
Trimble	2101	*YES*	*YES*	*YES*	*YES*		*YES*
Bendix /King	35/135A	*YES*				*YES*	
Bendix / King	89/89B	*YES*			*YES*		*YES(B)*
Bendix / King	90B	*YES*	*YES*		*YES*		*YES*
Bendix / King	900	*YES*	*YES*		*YES*		*YES*
UPS Aviation Technologies*	APOLLO 2001	*YES*			*YES*		*YES*
Northstar	M3	*YES*			*YES*		*YES*
Northstar	GPS-60	*YES*				*YES*	

* formerly II Morrow, Incorporated

7.2.2 Mode S Transponder Subsystem

Three manufacturers (BF Goodrich, Allied Signal, and Rockwell-Collins) were contacted regarding the availability of Mode S transponders with extended squitter capability.

BF Goodrich does not have any ADS-B hardware now or planned to be available in the near term (i.e., by this summer).

Rockwell-Collins does have a suitable transponder and would potentially be interested. They have a staff engineer that has been assigned to a special-projects section at Rockwell-Collins to interface and work on ADS-B and other customer efforts. They have modified their TDR-94D (panel & remote mount) business/helicopter class transponder to include an ADS-B extended squitter capability. This transponder is about 1/4 the size of the air transport category transponder. However, they don't have a 1090 receiver incorporated yet. They're currently using a modified TCAS receiver for this purpose (i.e., a separate box).

[Note: The staff engineer suggested leaving the existing transponders in the aircraft to meet ATC airspace requirements and have a pilot procedure to switch the ADS-B/ATC transponder functionality on and off.]

Allied Signal also has a suitable Mode S transponder that fits in the general aviation/helicopter

category. Their transponder is the Model KT70. The KT70 is a panel-mounted unit with the controls mounted on the unit. MIT Lincoln Labs used modified KT70 transponders in their ADS-B tests in the Gulf of Mexico. The KT70's were installed on two Bell 206 helicopters [18].

It is recommended that NASA approach both Rockwell Collins and Allied Signal regarding participation in developing the RRADS system. It is believed that Mode S transponders from either company can be modified to add the extended squitter capability and should perform satisfactorily in meeting NASA's research objectives. It is quite possible that a decision to select the appropriate transponder may be based more on the companies' ability to support NASA's research program rather than technical performance specifications.

7.2.3 1090 MHz Downlink Receiver Subsystem

Investigations of methods for receiving the ADS-B 1090 MHz Mode S extended squitter messages containing aircraft state information have resulted in identification of three possibilities:

- Modified TCAS Version II (TCAS II) interrogator/receiver,
- Modified Traffic and Conflict Alert Device (TCAD) System (manufactured by Ryan International), and
- Personal computer (PC)-based 1090 MHz receiver cards (manufactured by Rannoch Corporation) integrated in a dedicated computer system.

It was determined that each of these candidates could be used as the basis of a viable 1090 MHz receiving subsystem. Each has distinct advantages as well as disadvantages.

Modified TCAS II System

A commercially available TCAS II, with modifications performed by the manufacturer, would be procured. The functioning of the TCAS II concept is based on active interrogations (on 1030 MHz) from aircraft to aircraft, eliciting replies from the Mode C or Mode S transponders (or cooperating TCAS II systems) aboard potential intruder aircraft. The system would be modified to suppress the interrogation function, and to include decoding of Mode S DF-17 message formats (extended squitter position and velocity messages), and to provide those messages as a part of its digital output. The advantages of this approach include:

- The system is capable of receiving the 1090 MHz downlinks on two antennas (top and bottom of fuselage),
- All required reception, computation, and communications bus capabilities are already a part of the existing equipment (although significant software reprogramming would be required),
- Receiving sensitivity is high; reception range is not limited relative to the needs of this program, and
- The systems are designed for aircraft installation and would not pose a certification risk.

The disadvantages of the TCAS II approach include:

- The devices are designed for air transport and large general aviation aircraft installations. Therefore, they are quite large, heavy and expensive,
- Considerable hardware and software modifications would be required, and
- Significant capabilities of the device (such as the ability to perform the 1030 MHz interrogations) would be of no use in this application.

It was concluded that, while this approach would give superior performance, the costs of obtaining and installing the systems would be high.

Modified TCAD System

Ryan International manufacturers a proprietary device called TCAD, meaning Traffic and Conflict Alert Device. It is intended to perform some TCAS-like functions without involving the active interrogation of nearby aircraft transponders. Instead, the 1090 MHz replies of nearby aircraft are analyzed for their threat potential. Three parameters of the received signals are analyzed: received signal amplitude (considered to be approximately analogous to estimated range); Mode C encoded altitude; and, in the full implementation of TCAD, relative bearing as measured by direction-sensing antennas. The Mode C altitude is compared to local encoded altitude to filter out non-threat aircraft. A minimum of two antennas are utilized (top and bottom of fuselage). In a stock configuration, the TCAD is capable of outputting (on an RS232C port) data received from Mode C and Mode S transponders. Mode S extended squitter messages (DF-17 message format) are not decoded. The reception range is limited to roughly 6 to 8 miles in order to avoid overloading the digital processor. The range limit also eliminates replies from non-threat aircraft.

A TCAD unit, with some modifications performed by the manufacturer, could be utilized as a 1090 MHz receiver for purposes of this ADS-B research implementation. A necessary modification would be to detect and decode the extended squitter (DF-17) message format and to output that data on the digital port while suppressing the other (non-squitter) data. Further optional modifications include improving the receiver sensitivity (and possibly, processor capability) to extend the reception range to 20 miles. The manufacturer has been involved in the development of modifications under contract to Harris Corporation. The results of this effort will be evaluated as part of NASA's AGATE program and the CAA's ADS-B demonstration/evaluation in the Ohio Valley.

The advantages of the TCAD approach include:

- The system is already capable of receiving the 1090 MHz downlinks on two antennas (top and bottom of fuselage),
- Required manufacturer modifications to achieve a usable system are relatively minor,
- The system is relatively small and low cost, appropriate to rotorcraft and other general aviation aircraft, and
- The system is designed for aircraft installation and would not pose a certification risk.

The disadvantages of the TCAD approach include:

- Reception range is limited to 6 to 8 miles. Extension of range to 15 to 20 miles is possible, but may require extensive modifications. Reception beyond 20 miles may not be possible with this unit.

It was concluded that the TCAD would be a suitable 1090 MHz reception device for this program. This conclusion was based on the device's relatively low cost, rapid availability, and its capability to be readily installed in an aircraft. Also, the fact that it has limited reception range would probably not conflict with the early goals of this program.

PC-based 1090 MHz Receiver Cards

Rannoch Corporation manufacturers a line of equipment designed to perform reception of 1090 MHz downlinks for various purposes, primarily for local area multilateration applications requiring accurate measurements of aircraft positions and velocities. Two different computer-based cards are available: a PC compatible card and a Versa Module Europa (VME) card. Both require the use of a receiver/downconverter box mounted adjacent to the receive antenna. The combination of equipment, when implemented with a properly programmed Pentium II computer system, provides a very capable receiver for 1090 MHz extended squitter messages (as well as the other Mode C and Mode S messages). These subsystems are, however, designed primarily for ground-based implementation. Considerable adaptation would be required to implement them as a part of a helicopter-based ADS-B/CDTI system.

The advantages of the PC-card approach include:

- A functioning 1090 MHz extended squitter reception capability may be assembled without requiring manufacturer modifications, and
- The reception range of the PC-card system (with receiver/downconverter box) is quite extensive.

The disadvantages of the PC-card approach include:

- A card can only receive from one antenna. Duplicate cards and receiver/downconverter boxes (integrated into one computer unit) are required for the top and bottom antennas,
- A complete computer chassis must be provided to support the 1090 MHz reception function, and
- The system components are not designed for installation in an aircraft, considerably complicating the certification issue and introducing a potential risk factor as to satisfactory performance of the unit in the aircraft. Also, size, power and weight issues may be problematic considering the intended installation in a light helicopter.

It was concluded that, while elements of this concept may eventually find application to this ADS-B program, the near-term use of this approach would be more problematic than either the TCAS II approach or the TCAD approach.

Recommendation for 1090 MHz Receiver Subsystem

It is recommended that the TCAD device designed to accept a dual antenna installation (Ryan model number 9900A), appropriately modified, be acquired as the 1090 MHz reception device for this program. Installation in a helicopter would be straightforward and require little power or avionics rack space (1.4 amps, 6.5 pounds, 7.3 x 3.1 x 9.3 inches). Interconnection to the ADS-B/CDTI package would be via an RS232C physical connection. Performance (given the known range limitation) should be acceptable for this research program.

7.2.4 Pentium Processor and Display Subsystem

Information was obtained from Seagull Technology, Incorporated, on their FireFlight II moving map display system. This system was developed for the California Department of Forestry to aid in their management of forest fires. It is a standalone portable unit that does not require connection to aircraft systems. FireFlight II has been built on an open architecture principle and it meets most of the requirements for a Pentium processor and display unit identified in Section 6.2 and 6.3.

The one requirement that is apparently not met by FireFlight II is to have a separate technician's control and display unit. Discussions with Seagull engineers indicated that a separate control and display unit could be added to the FireFlight II system. This effort would require about six manmonths of effort.

Detailed technical information concerning FireFlight II from Seagull Technology, Incorporated, is located in Appendix E.

7.3 Recommended RRADS Component List

The recommended ADS-B component list for the RRADS system is as follows:

Component	Recommended Unit
GPS Receiver	Trimble 2101 (stock)
Mode S Transponder	Collins TDR 94D or Bendix King KT70 (either unit must be modified for extended squitter capability)
Mode S 1090 MHz Receiver	Ryan International TCAD Model 9900A (modified to recognize and process extended squitter)
Pentium Processor and Flat Panel Display	Seagull Technology FireFlight II (modified to add a technician control/display unit)

These components are recommended for installation in both the UH-60 and OH-58 aircraft.

8.0 AVIONICS INTEGRATION

8.1 Functional Integration of Avionics

In keeping with the "test bed" environment envisioned for the present evaluation of the Automatic Dependent Surveillance systems, there will not be functional integration of the various avionics components to the depth that would be expected in an operational installation utilizing mature ADS avionics. In an operational installation, all Mode S uplink and downlink functions would be integrated into a single transponder system. All ADS-B/CDTI functions would be integrated into a single hardware entity, which probably (for a helicopter or light aircraft installation) would be a panel-mounted display/processor, or alternatively a remote processor designed to interface with a common weather radar display. All air-ground dependent surveillance functions (ADS-A) would be integrated into a single remote-mounted package with interface to the satellite communications antennas (or alternative data link) and to a small panel-mounted control head. Ship altimeter encoded output would be connected to the ADS unit as well as the transponder in both cases. The GPS navigator will be the heart of either system.

For present purposes, the lack of suitable, mature ADS-related avionics, and the desire to be able to control, for program experimental objectives, the functional characteristics and pilot interface aspects of those avionics, forces a less deeply integrated system architecture. This approach, even though using new subsystem elements for purposes other than their original intended use, or by utilizing only portions of their normal capabilities, will yet result in satisfaction of program objectives.

Both the ADS-A and ADS-B systems require a GPS navigator as the fundamental data source for position/velocity reporting. The more sophisticated levels of functionality envisioned for each system may well use other data elements (such as intended route of flight information) from the GPS system as well. GPS avionics designed with the types of outputs needed are mature, TSO'ed products and, therefore, could eventually be permanently installed as primary navigation systems on the test aircraft, fully integrated with other aircraft systems, most likely to remain after the present program is completed.

The ADS-A system requires a data link subsystem to report flight information for ground surveillance purposes. Since over-the-horizon capability is required of this link, it is most likely that Mode S will not be used. The alternatives, which include various satellite data link candidates, VHF data link to a ground repeater network, the UAT data link, and others, will involve installation of subsystems specifically designed for that purpose. These installations will be temporary and will most likely not involve interfaces with other avionics on the aircraft (with the possible exception of the L-band suppression system).

While several data link candidates are viable for purposes of the ADS-B system, such as UAT, VDL Mode 3, VDL Mode 4, etc., the assumption adopted for this evaluation is that the Mode S 1090 MHz down link extended squitter format would be used. While the 1090 MHz channel is used by all standard (and military) transponders, the extended squitter function is not available on conventional avionics. This has two primary implications: to provide the 1090 MHz down link, a squitter-capable transponder will be required to replace, or supplement, the existing ship

transponder; and, since transponder avionics are not designed to receive 1090 MHz signals, a dedicated receiver subsystem must be provided. Currently-available commercial transponders that have Mode S extended squitter capability will not have the IFF functions of a military transponder. Therefore, if the ship transponder is replaced by the Mode S unit, that condition would only be temporary over the lifetime of the ADS-B evaluation program. The dedicated 1090 MHz receiving subsystem also would only be a temporary appurtenance and, in fact, might be installed as a part of the ADS-B logic and data collection package.

Both the ADS-A and ADS-B systems require altimeter information. If the ship is equipped with an Air Data system and/or a Flight Management System, barometric altitude will most likely be available on an ARINC 429 bus. In the subject helicopters, possessing more basic avionics packages, a direct connection to the encoding output of the pilot's altimeter will be required. For ADS-A, the connection will be to the ADS-A system itself. For ADS-B, the connection will be required to both the Mode S transponder and to the ADS-B system itself.

The requirements for a cockpit control/display unit are quite different for the two systems. In the case of ADS-A, the interface would be quite simple, in that no actual display or depiction of aircraft state parameters is required. Only basic control and monitoring capability is required. A small control display unit (CDU) will be required for purposes of this evaluation program. In actual operational use, these functions would probably be integrated with the communications control panel (or its digital equivalent). In the case of ADS-B/CDTI, the interface is much more involved and is graphical in nature. While it might be integrated with weather radar or an electronic attitude director indicator (EADI) type display in some operational implementations, a dedicated control/display will be used for these evaluations. This will allow variations in control and display philosophy to be tested as a part of this evaluation program.

There are two other functions to be performed by these two systems which have an impact on functional integration issues. First, each must allow for control and operation by a flight test technician. Second, they each will be designed to perform a data logging function to collect data for post-flight analysis. In the ADS-A case, both of these functions are rather limited in scope. There would be few functional choices for the technician to make, and most data logging parameters would come from the GPS system itself. In the ADS-B case, the role of the technician is broadened in scope. He would control the characteristics of the ADS-B/CDTI control/display unit through selection of preprogrammed options. Also, the range of aircraft parameters to be logged for post-flight analysis may be far more extensive. For example, aircraft airspeed and heading, pitch and roll angles may be of interest, as may be cyclic, collective, pedal and throttle positions and rotor torque.

8.1.1 Character of the Aircraft Environment

UH-60A Basic Considerations

Being a large helicopter, the UH-60A is not lacking for availability of power and avionics rack space. Two independent generators supply at least 30 kilovolt amperes of 400 Hz AC power at several voltages. There is also a 60 Hz converter on board. Five kilowatts from each generator

is converted to 28 VDC power. Considerable avionics rack space is available, and other space in the cabin for associated ADS test program equipment is readily available.

The UH-60A has panel space available on the instrument panel itself and in the radio console between the pilot positions (up to three 5” high panel mount boxes could fit there). Space is available for permanent mounting of avionics control/display heads. Temporary space for other items such as the CDTI control/display should not be difficult to obtain. The unit is equipped with an encoding altimeter and a military (modes 1, 2, 3/C and 4) transponder.

OH-58C Basic Considerations

Fortuitously, the OH-58C also seems to have adequate power provided from a 28 VDC generator. 115V/400Hz power is provided through use of a static inverter rated at roughly 100VA. The powering of avionics equipment requiring only 28 VDC power is not a problem. Any requirements for 400Hz power must be very limited. No 60Hz power is available. Computer equipment involved in the ADS function and provided for data logging may have to be self-powered, or be provided with a dedicated 28 VDC inverter.

The main avionics rack is located behind the cabin. Available avionics rack space is limited, but may be sufficient for required avionics to be added for the program. Other space in the cabin (rear seat) is available for mounting other equipment, such as that required for providing the ADS function, for driving the CDTI and/or for data logging, and for a data technician to fly along.

On the OH-58C some panel space for mounting avionics control/display heads is available, both on the instrument panel itself (possibly two 5” high panel mount boxes), plus a small amount of space on the radio console between the pilot positions. Achieving the preferred temporary mounting of the CDTI display directly in the pilot’s field of vision might require a creative approach.

The unit is equipped with an encoding altimeter and a military (modes 1, 2, 3/C and 4) transponder.

Antenna Mounting Considerations

Since ADS-B broadcasting and receiving functions must both be omni-directional, if the L-band Mode S method is used, several new antennas may be required. Mounting locations on helicopters are always at a premium. Fortunately, siting considerations are not so critical at L-band. A problem is that, since separate equipment will be used for squitter transmission and reception, these functions will not be able to share antennas. Thus, four new L-band antennas will be required. Besides the L-band antennas, a probable new antenna requirement would include a GPS receiver antenna.

The UH-60A is slated for an upgrade of its Doppler navigation system with a Doppler/GPS set that is intended for VFR use (with the GPS function intended primarily for updating the Doppler). The GPS antenna will be mounted aft of the main rotor mast, well under the main rotor. The OH-58C has no firm plans for upgrading to GPS capability.

8.1.2 Air-to-Air Avionics Integration

In regard to integration of avionics to achieve the ADS-B/CDTI capability, the two basic functions involved here will be treated separately. These are the data broadcast function and the data reception and traffic advisory/CDTI function. These may be treated separately for the following reasons. The data broadcast function provides aircraft state data over the 1090 MHz downlink channel. In an experimental environment where ADS-B is being studied as an aid to visual acquisition of nearby traffic, only the 'subject' aircraft need be equipped with data reception capability; the one or more 'intruder' aircraft need only be equipped with data broadcast capability. This is in contrast to the anticipated operational scenario, where most aircraft would be equipped with both capabilities.

The data broadcast capability is the more easily implemented of the two functions. Aircraft so equipped would require the following subsystems:

- Mode S transponder with extended squitter capability and dual antennas (top and bottom),
- GPS navigator with compatible data output, and
- Encoding altimeter.

The Mode S transponder, such as the Collins TDR 94D or the Bendix KT-70, will take over the standard transponder functions as well as providing the extended squitter capability. The pre-existing aircraft transponder would be disabled for purposes of the tests. The control-display head provided with this transponder may be mounted on the instrument panel in a location deemed to be convenient. Transmitting of squitter messages would take place from both antennas (but not simultaneously), whereas, for present purposes, reception of ground interrogations need only utilize the bottom antenna. This unit is designed to receive aircraft state data via an ARINC 429 data bus. Interconnection to the existing encoding altimeter is standard (an encoding altimeter can drive more than one transponder) so the interconnection may be made permanent. If desired, the existing L-band transponder antenna may be used by the new transponder; this will require manual reconnection of cables before and after test flights, but would reduce the problem of mounting new antennas. There should be no abnormal certification issues related to installing this transponder for these tests.

The GPS navigator, a Trimble 2101, shall also be installed according to normal, factory-recommended procedures, including those for mounting a GPS antenna on a helicopter. This unit was chosen because it is IFR-capable, and because it has the required ARINC 429 aircraft state outputs. While the navigator components (control-display unit, receiver/computer unit, antenna and antenna coupler) may be installed in a normal configuration in support of standard VFR and IFR operating procedures (with the control-display unit location convenient to the pilot and with interconnections to aircraft flight control instrumentation), it is not necessary to do this for purposes of these tests. If it is intended that this navigator shall become a permanent part of the aircraft configuration, then a complete installation should be performed in accordance with manufacturer's recommendations. Since, however, the only required function of the GPS is in support of the ADS-B data broadcast capability, a considerably simpler installation will suffice. Under this scenario, the antenna, antenna coupler and receiver/computer rack mount installation

would be conducted normally, without interconnecting to aircraft flight control instrumentation. The control-display unit should be accessible to the pilot to monitor its operation, but need not be conveniently located since no ship navigation functions will be performed using it. There should be no abnormal certification issues related to installing the GPS navigator for these tests.

The data broadcast function should perform autonomously. With transponder activated and GPS navigator operating, extended squitter messages will emanate from the aircraft in a continuous fashion. There is no requirement for a technician. Nor is there a requirement to electronically log the GPS data being passed to the transponder.

The data reception and traffic advisory/CDTI function will require a much more involved aircraft installation. However, it should be noted that the Mode S extended squitter transponder is not needed. Also, the nature of the GPS navigator and encoding altimeter interfaces to other systems will be considerably different from the standard configurations used in the data broadcast configuration. The following subsystems will be required:

- GPS navigator with data outputs,
- Encoding altimeter,
- 1090 MHz Mode S extended squitter receiver with dual antennas (top and bottom),
- Traffic advisory/CDTI processor unit, to compare squitter states with present aircraft state,
- Data logging unit,
- Traffic advisory control-display unit (or CDTI display), and
- Technician console (keyboard and display).

The Mode S squitter transponder is not required on the test aircraft since (nominally, at least) there is no other aircraft available to receive its transmissions. The encoding altimeter output and GPS receiver digital (ARINC 429) outputs are therefore not connected to a transponder, but are required as inputs to the traffic advisory/CDTI processor unit (hereafter referred to as the 'processor'). These interconnections are not standard avionics interconnections envisioned in the TSO for either the altimeter or the GPS navigator. In the case of the altimeter, it may be advisable to install a second encoding altimeter (or use the copilot's, if it is not connected to a transponder) in order to avoid any potential airworthiness issues regarding the proper functioning of the ship's Mode C transponder. The digital outputs of the GPS receiver are not intended for connection to any other aircraft system in this case. Therefore, the potential for the processor to interfere with other aircraft systems is remote. Regardless, it may be advisable to avoid carrying the GPS navigator installation to the point of providing the usual interfaces to flight control instruments at this time. The navigator control/display unit may be panel-mounted in the pilot's view in anticipation of an eventual complete IFR installation, if that is desired. If, however, completion of that installation is deferred until the ADS-B test program is completed, no airworthiness issues will arise as a result of the non-standard connection of its data outputs to the processor. This is consistent with the VFR objectives of the ADS-B program. The GPS antenna and its coupler should be installed in accordance with the manufacturer's recommendations. The receiver/computer may be installed in an avionics rack with standard interconnection to the control/display unit, and with connection to the traffic advisory/CDTI processor, but with connections to other aircraft systems not provided at present.

A prime candidate to perform the 1090 MHz Mode S extended squitter receiver function is the Ryan International 9900A TCAD, ordered with special modifications to decode extended squitter messages and route them to the digital interface. This unit is a standard piece of avionics equipment and provides connections (and receiver front-end circuitry) for dual antennas (top and bottom of hull). The data output is in the RS-232C format, which can be routed directly to the traffic advisory/CDTI processor. There are no other interconnections to aircraft systems required (with the exception of the L-band suppression bus). Two standard L-band antennas should be installed according to the receiver manufacturer's recommendations. The TCAD receiver/processor may be installed in an avionics rack. There is also a control/display unit, which need not be mounted conveniently for pilot operation or viewing, and may, in fact, be located for operation by the technician.

The traffic advisory/CDTI processor will be a dedicated piece of equipment using a Pentium-based processor unit. A prime candidate to perform this function is the Seagull Technology FireFlight II system (with required modifications). Several functions will be integrated within this unit:

- Comparison of squitter reply aircraft states with own ship state,
- Generation of traffic advisories regarding nearby traffic,
- Driving a traffic advisory pilot control/display unit,
- Driving a Cockpit Display of Traffic Information pilot control/display unit,
- Performing the data logging function on removable media, and
- Providing the technician interface (keyboard, mouse, and display console).

Provision of these functions will require additional software development over and above the functions already provided in the FireFlight II unit. The processor is designed with expansion space for integrating additional interfaces, as will be required under this program.

If the Seagull system is unavailable, or not found to be suitable for this program, the needed functionality can be developed using an off-the-shelf Pentium computer unit and associated peripherals. There are three types of digital data that this unit must be designed to accept: ARINC 429, RS-232C and parallel (the form of the encoding altimeter data). Since PCMCIA interface cards are available to perform the ARINC 429 and parallel interface functions, and since RS-232C is a standard PC interface capability, a portable laptop-style computer may be utilized. This is consistent with the need for the processor to be self-powered for use on the OH-58C. Keyboard, display and mouse are integral to the unit. A video graphics array (VGA) connection is available for driving a flat-panel color display, which could form the basis of the traffic advisory or CDTI display for the pilot. If an alternative control/display unit is utilized, interfaces (both RS-232C and ARINC 429) are available to communicate with it. An integral (or add-on) removable disk-based mass storage unit will provide convenient mass storage of logged test data.

8.2 Avionics Systems Acceptance Test Procedures

8.2.1 Component and Subsystem Bench Tests

Introduction
The tests outlined herein pertain to proving the performance of the specific subsystem functions which directly support ADS-B/CDTI. The assumption is that standard avionics bench tests will be performed on those components and subsystems that are, in fact, standard avionics equipment. These may be tested using the equipment and procedures prescribed by their respective manufacturers. Additional tests are recommended here in order to evaluate their performance in the specific roles for which they are included in the ADS-B/CDTI system.

Mode S Data Link Subsystem Elements – Squitter Transmitter
In addition to tests as a standard Mode S transponder, the ADS Squitter capability may be tested in the following manner:

Equipment Required:

- ARINC 429 test set, or other means of generating the lat/lon/alt input to the transponder,
- Transponder test set, and
- Scope connected to the test set to display detected transmitter output.

Procedure:

Squitter Function: With lat/lon/alt inputs being provided periodically to the transponder, and with the test set interrogation function suppressed, the extended squitter transmissions should be visible roughly every half-second on the scope. If possible, the binary contents of the squitter should be captured and decoded to verify proper operation of the squitter coding function.

Antenna Diversity Function: If designed to provide antenna diversity, the extended squitter transmissions should be found at both antenna terminals at the 2 Hz rate, but should not be simultaneous.

Antenna Selector Function: If the transponder is not designed to support antenna diversity, an external antenna-switching unit will have to be provided. This unit should be tested to show that it switches the transponder output in the desired manner.

Mode S Data Link Subsystem Elements – 1090 MHz Receiver
The 1090 MHz receiver may or may not consist of standard avionics equipment. If it does, then the manufacturer's recommended bench test procedures would be followed in addition to those presented here. The receiver may be a freestanding unit, or might simply consist of one or more cards intended to be a part of a dedicated computer system. As such, the cards shall be configured with that computer system, with software implemented to control the operation of the cards and to extract data from them.

Equipment Required:

- 1090 MHz Squitter transmitter test generator – the squitter transmitter configuration above may be used if it tests successfully (It would be connected to the receiver through an attenuator), and
- Computer or other digital display to display decoded squitter output.

Procedure:

With the squitter transmitter and its test sets configured to produce the 2 Hz squitter only, the receiver should be operable to decode and display the same data that is being encoded by the transmitter. With the transponder test set configured to generate a high level of background interrogation traffic, the squitter messages should still be receivable and correctly decodable by the receiver on a reliable basis.

GPS Navigator Subsystem

The GPS subsystem will be of a standard factory configuration. No modifications or special performance features shall be required. One of the digital outputs available on the navigator shall be used as the source of position and velocity (aircraft state) information for the Mode S Extended Squitter message. That information will also be part of the data logged during flight test evaluations of the ADS-B concept. The output may be in either RS-232C format or ARINC 429 format (with the ARINC format being preferable). Standard factory-recommended bench test procedures should be followed, with the following addition.

Equipment Required:

- ARINC 429 test set to decode messages generated by the navigator.
- (or) RS-232C terminal or printer for displaying RS-232C data stream.

Procedure:

Select each of the ARINC 429 message labels to be used for ADS-B squitter message formulation to determine that data transmitted represents the actual status of the navigator as displayed on its CDU.

Encoding Altimeter

The encoding altimeter will be of a standard factory configuration. It is preferable that the primary altimeter used by the pilot be used for this purpose. It is already installed on each aircraft and is most likely connected to the transponder for the Mode C function. An encoding altimeter output is designed to drive multiple loads, so it can be connected to the Mode S squitter transmitter as well as the ship's regular transponder.

The encoding altimeter need not be removed from the aircraft for bench testing. A different unit, or a test set, may be substituted to complete the bench tests of other equipment requiring the encoded altimetry input.

Pentium processor/CDTI Display

The Pentium processor and its associated CDTI display will most likely consist of a specially developed computer system with associated I/O devices and capabilities. It is anticipated that this system will be thoroughly developed and debugged using simulated inputs prior to delivery for bench testing. The bench test purpose is to assure that the system operates as intended when interconnected with the specific devices to be installed with it in the aircraft.

Equipment Required:

- Mode S Data Link Squitter Transmitter subsystem.
- Transponder test set.
- Mode S Data Link 1090 MHz Receiver subsystem.
- 1090 MHz squitter transmitter test generator (the above transmitter may be used during tests where its functionality with the rest of the system is not being evaluated).
- GPS Navigator subsystem.
- Encoding Altimeter subsystem.

Procedure:

With all components of the Pentium processor and CDTI display connected, the functionality of the system in generating Mode S extended squitter containing valid GPS-derived position & velocity data shall be evaluated. The functionality of the system in receiving and processing extended squitter messages and displaying the resultant simulated traffic on the CDTI and other system outputs and displays shall be tested.

8.2.2 Installed Equipment Ramp Test Procedures

In preparation for the ramp tests it is anticipated that all equipment will be installed in the aircraft according to avionics manufacturer's recommendations, and will have been bench checked in accordance with the above sections. The ramp tests may be conducted with engines inoperative provided that an auxiliary power source can be provided. All interconnections should be in place as planned for actual flight. The exception would be the interconnection of the strut squat switch (if any is present) to the transponders and the GPS navigation system. The ADS-B/CDTI system with its associated data logging function and technician interface should be interconnected and operational as planned for flight. Signals to and from the subsystems should be in the form of actual radiated energy (to and from a transponder test set, and/or from airborne traffic operating at and over the airport environment). Simulated flight altitudes may be provided through use of a pneumatic altimeter test set connected to the altimeter static port on the exterior of the aircraft. A simulated ADS-B down link signal shall be provided from a test set (if possible) or from a combination of hardware (Mode S transponder with squitter capability with GPS position inputs simulated). The following tests should be conducted:

GPS Receiver Functionality

The GPS receiver subsystem should be exercised through its ground checkout sequence to verify that the ARINC 429 bus data elements are being properly received and decoded by the Pentium processor system and the Mode S squitter transponder. Verification in the ADS-B system may

be done via display on the technician's console. Verification in the transponder is done in the following step.

Down-link Radiation:

The portable transponder test set should be used to verify that each transmitter antenna (top and bottom) is emitting the ADS-B downlink Mode S squitter message at the 2 Hz rate. If possible, the message data fields should be decoded and compared with the GPS data and altimeter information being provided. Ship 'altitude' may be run up pneumatically, and the decoded reception should match accordingly.

ADS-B 1090 MHz Downlink Reception and Decoding:

With the 1090 MHz test set operating, reception and valid decoding of the transmissions should be verified via display on the technician's console. Using attenuators (built into the test set, or installed externally), the maximum anticipated reception range should be verified. Operation of both antennas may be verified by temporarily shielding each antenna in turn.

ADS-B processing capability:

Since simulating movement of the targets and own ship are probably not feasible, correct computation of the range, range rate, altitude difference, bearing and relative velocity of the simulated static target shall be verified via display on the technician's console.

9.0 CONCLUSIONS

ADS-A systems employing satellite communications are being implemented at the present time. ADS-A is being evaluated in the South Pacific and major airframe manufacturers are equipping aircraft with the necessary subsystems (FANS 1/A). Several other evaluations are in process in various locales around the world.

M-ADS, a modified version of ADS-A, is also being implemented for helicopter traffic in the North Sea under the sponsorship of the Norwegian government. Users will be required to have M-ADS capability to operate in M-ADS lanes from the Norwegian mainland to the offshore platforms.

Members of the Cargo Airline Association under the Ohio Valley project are evaluating ADS-B. ADS-B is also a primary motivation of the Capstone Program on the west coast of the Alaskan mainland. Europeans are likewise evaluating ADS-B concepts. There seems to be general agreement that data link services in the form of ADS-B, TIS-B, FIS-B, and DGNSS have the potential to benefit aviation. Some of these services require a considerable amount of data transmission capability. However, there are issues and uncertainties regarding the data link medium. Some of the issues that must be addressed include: spectrum availability, bandwidth, antenna radiation patterns around the aircraft, anticipated traffic densities, user equipage rates, and line-of-sight limitations.

The Gulf of Mexico low altitude environment is a good locale for conceptualizing and evaluating candidate ADS-A and ADS-B concepts. The most problematic aspect of either technique is the data link. In most areas of the conterminous United States (CONUS) the line-of-sight constraints of several data link concepts may not, at first glance, be considered to be an overwhelming issue. However, terrain masking, antenna shadowing, and system saturation issues are there nonetheless. Due to the nature of low altitude helicopter operations in the Gulf of Mexico environment, all these issues must be evaluated.

Likewise, the low altitude Gulf of Mexico locale would be an ideal environment for testing, on a broadly implemented basis, either the ADS-A or ADS-B concept. Since operations are rather homogeneous, the operators have strong economic motivations, and since these operators have cooperated in the past on procedural issues of mutual benefit, the Gulf provides the desired environment which is both hostile technically but beneficial operationally.

The OSI basis of the ATN concept as developed by ICAO is essential for the healthy development of the concepts it is designed to support (ADS-A, CPDLC, etc.). However, the case for ADS-B may well be different. Successful implementation of ADS-B on a wide basis will require standardization of the data link in order to be within the economic capabilities of the broad class of general aviation operators in order for them to equip and to take advantage its benefits.

The RRADS requirements developed herein apply equally well to the low-end general aviation user. These users typically fly at low altitudes (below 10,000 feet), under VFR, at airspeeds less than 180 knots, and outside of continuous surveillance radar coverage. These aircraft also

operate to and from small airfields that often do not have ATC towers. The cost and operational objectives of rotorcraft and general aviation users are very similar and quite compatible with RRADS requirements. Therefore, it is believed that the RRADS architecture is also appropriate for a corresponding general aviation research capability.

10.0 RECOMMENDATIONS

Propose and evaluate candidate data communications link technologies appropriate to the capabilities and needs of various classes of general aviation operators. This would include performing cost/benefit studies of those types of operators who would be taking advantage of the benefits of ADS-A.

On a technical and cost basis, perform a detailed evaluation of alternate data link concepts for the ADS-B data broadcast function. Consider that the benefits of ADS-B are only realizable when nearly all operators in a given airspace are emitter-equipped.

Perform research on concepts and design alternatives aimed toward the development of a minimum-capability 'emitter box' to be sold to the broad mass of GA operators. This would constitute a 'minimum price of admission' for operations in certain operational areas, just as Mode C altitude encoding is a requirement today.

Perform research on the technology requirements and human factors design considerations of the CDTI concept in the context of each of the four principal rotorcraft applications identified in "Minimum Aviation System Performance Standards for Automatic Dependent Surveillance Broadcast (ADS-B)," RTCA DO-242 [1, p 54, Table 2-2]:

- Aid to visual acquisition,
- Conflict avoidance and collision avoidance,
- Separation assurance and sequencing, and
- Flight path deconfliction planning.

Specific emphasis should be placed on CDTI design concepts which inherently promote simplicity of design and safety of flight, and which are unambiguous and do not require extensive training and familiarization for their use.

Based on experiences gained from current implementations (e.g., M-ADS, airlines) some observations can be made on technology areas that would have major benefits when available. These include:

- Low cost satellite transceivers
- Small, low cost, steerable antennas to provide high data rate satellite links for smaller, non-air carrier aircraft
- Ground automation modules based on common standards (both components and interfaces) to better capture good human machine interface designs and support their transfer to new applications instead of inventing new and non-standard (i.e., proprietary) designs.

Given the successful working relationships that were established between FAA and industry to develop and implement the GPS grid overlay for helicopter operations in the Gulf of Mexico, a good approach to addressing both the certification and surveillance improvement issues may be to build on these established relationships to agree on and implement improved operational capabilities in the area. Since surveillance improvements in the Gulf are likely to require both

the airspace users and the FAA to make changes to their equipment, it is in the best interests of both groups to work closely together.

The initial ADS emphasis should be on providing strong capabilities for a gateway system at Houston Center that can process reports from whatever position reporting systems are installed in the helicopters. Initially, the specific ADS system used is less important than the availability of position reports to support the overall air-ground ADS process development. In the near term transcribed voice reports along with Flite Trak data provided by phone line from Chevron's operations center could serve as the basis for an initial demonstration for the processing and display of new data sources. As more and different data sources become available, these could be included and used to build upon and gain needed experience with data integration and information display, data link operational procedures, and computer/human interface issues.

NASA should give consideration to developing a general aviation ADS-B research capability based on the RRADS architecture. This general aviation capability could be used in conjunction with the rotorcraft research capability to address issues of common interest such as enhanced situational awareness, single pilot workload, and pilot ADS-B procedures development. The general aviation ADS-B capability could also be used to address issues that are primarily of interest to general aviation such as enhanced ground traffic awareness at non-towered airports.

The recommended ADS-B component list for the RRADS system, NASA's rotorcraft research capability, is as follows:

Component	Recommended Unit
GPS Receiver	Trimble 2101 (stock)
Mode S Transponder	Collins TDR 94D or Bendix King KT70 (either unit must be modified for extended squitter capability)
Mode S 1090 MHz Receiver	Ryan International TCAD Model 9900A (modified to recognize and process extended squitter)
Pentium Processor and Flat Panel Display	Seagull Technology FireFlight II (modified to add a technician control/display unit)

These components are recommended for installation in both the UH-60 and OH-58 aircraft.

References

1. RTCA Special Committee 186; “Minimum Aviation System Performance Standards for Automatic Dependent Surveillance Broadcast (ADS-B),” Document No. RTCA/DO-242; RTCA Incorporated, Washington, DC; February 19, 1998.

2. RTCA Special Committee 186; “Guidance for Initial Implementation of Cockpit Display of Traffic Information,” Document No. RTCA/DO-243; RTCA, Incorporated, Washington, DC; February 19, 1998.

3. Federal Aviation Administration; “Gulf of Mexico Communications Navigation Surveillance Automation Operational Concept (Draft 2.3), GOMEX/GOMP Projects,” Federal Aviation Administration, Washington, DC; January 30, 1998.

4. Helicopter Safety Advisory Conference (HASC); “1998 Gulf of Mexico Offshore Helicopter Oil Industry Operations and Safety Review;” May 20, 1999.

5. Avionics Magazine; “Flying FANS with Boeing;” October 1998; Pages 30-37.

6. Avionics Magazine; “Airbus AIMS for FANS;” October 1998; Pages 24-28.

7. Norwegian Civil Avitaion Authority (Luftfartsverket), “ADS for helicopters in the North Sea M-ADS,” Version 1; Norway; October 15, 1998.

8. VERTIFLITE; Spring 1999; Volume 45, No. 2; Page 19.

9. Norwegian Civil Avitaion Authority (Luftfartsverket), “M-ADS Operational Concept,” OK1-Revision A, English Edition; Norway; December 10, 1998.

10. RTCA Task Force 4; Final Report of RTCA Task Force 4 – Certification; RTCA Incorporated, Washington, DC; February 26, 1999.

11. Federal Aviation Administration; “National Airspace System Architecture, Version 4.0;” Washington, DC; January 1999.

12. Mundra, A., et al; "ADS-B/CDTI Capabilities for Near-term Deployment: Some Early Results;" Mitre Corporation, McLean, Virginia; 16th Digital Avionics Systems Conference, 1997, Proceedings, November 1997, pp3.1-28 through 3.1-35.

13. Orlando, V. A., Knittel, G. H., and Boisvert, R. E.; “GPS-Squitter: System Concept, Performance, and Development Program;” Massachusetts Institute of Technology, Lincoln Laboratory Journal; Lexington, Massachusetts; Volume 7, Number 2, Fall 1994.

14. Cargo Airline Association; “ADS-B Operational Evaluation, Non-CAA Participation, Request for Information (RFI);” (letter to non-CAA participants); http://www.ads-b.com/Content/eval/index.htm.

15. FAA Alaskan Region; “Alaskan Region Capstone, Investment in Safety;” Anchorage, Alaska; http://www.alaska.faa.gov/capstone/.

16. “Capstone Avionics;” http://www.alaska.faa.gov/capstone/vendor.htm.

17. E. D. McConkey, A. L. Judkiewicz, and S. M. Hickok, “Instrument Approach Procedures for Helicopters,” Presented at the American Helicopter Society 52nd Annual Forum, Washington, D.C., June 4-6, 1996.

18. Boisvert, R.E., et al; "GPS-Squitter Low-altitude Air Surveillance in the Gulf of Mexico;" Massachusetts Institute of Technology, Lincoln Laboratory, 14th Digital Avionics Systems Conference, 1995, Proceedings, November 1995, pp39-44.

APPENDIX A – ACRONYMS

14CFR	Title 14, Code of Federal Regulations (Federal Aviation Regulations)
AAF	FAA's Airway Facilities Service
AATT	Advanced Air Transportation Technologies
AC (1)	FAA Advisory Circular
AC (2)	Alternating Current
ACARS	Aircraft Communications Addressing and Reporting System
ACC	Area Control Center
ADIZ	Air Defense Identification Zone
ADNS	ARINC Data Network Service
ADS	Automatic Dependent Surveillance
ADS-A	Automatic Dependent Surveillance – Addressable
ADS-B	Automatic Dependent Surveillance – Broadcast
ADS-C	Automatic Dependent Surveillance – Contract
ADTN-2000	Agency Data Transmission Network 2000
AEEC	Airlines Electronic Engineering Committee
AES	Aircraft Earth Station
AFDD	U.S. Army Aero Flight Dynamics Directorate
AFN	Air Traffic Services Facilities Notification
AFTN	Aeronautical Fixed Telecommunication Network
AGATE	Advanced General Aviation Transport Experiment
AMSS	Aeronautical Mobile Satellite Service
ANC	Air Navigation Commission
ANICS	Alaskan NAS Inter-facility Communication System
ANT	Antenna
AOC	Aeronautical Operational Control
AP	Application Process
API	Applications Programming Interface
APN	ARINC Packet Network
ARC	Ames Research Center
ARINC	ARINC Incorporated
ARTCC	Air Route Traffic Control Center
ATC	Air Traffic Control
ATCBI	Air Traffic Control Beacon Interrogator
ATCBI-R	Air Traffic Control Beacon Interrogator Replacement
ATCGS	Air Traffic Control Ground Segment
ATCRBS	Air Traffic Control Radar Beacon System
ATIS	Automated Terminal Information System
ATM	Air Traffic Management
ATN	Aeronautical Telecommunications Network
ATS	Air Traffic Services
ATSO	Air Transportation Systems Operation
AV	Anti-Vibration
BIS	Boundary Intermediate System
BOP/COP	Bit-Oriented Protocol/Character-Oriented Protocol
bps	Bits Per Second

CAA (1)	Cargo Airline Association
CAA (2)	Civil Aviation Authorities
CADSS	Central Automatic Dependent Surveillance Service
CDF	California Department of Forestry
CDM	Collaborative Decision Making
CDTI	Cockpit Display of Traffic Information
CDU	Control Display Unit
CFIT	Controlled Flight into Terrain
CFM	Cubic Feet Per Minute
CHI	Computer/Human Interface
CLNP	Connection-Less Network Protocol
CM	Context Management
CMU	Communications Management Unit
CNS	Communications, Navigation and Surveillance
CONUS	Conterminous United States
COTS	Commercial Off-The-Shelf
CPDLC	Controller-Pilot Data Link Communications
CPU	Central Processing Unit
CRC	Cyclic Redundancy Check
CRC-16	16-Bit Cyclic Redundancy Check
CTA	Control Area (ICAO Term)
DGNSS	Differential Global Navigation Satellite System
DGPS	Differential Global Positioning System
DMN	Data Multiplexing Network
DOT	Department of Transportation
DSS	Decision Support System
DTE	Data Terminal Equipment
DVFR	Defense Visual Flight Rules
EADI	Electronic Attitude Director Indicator
EIRP	Effective Isotropic Radiated Power
EMI	Electromagnetic Interference
EUROCAE	European Organization for Civil Aviation Electronics
FAA	Federal Aviation Administration
FAATSAT	Federal Aviation Administration Telecommunications Satellites
FANS	Future Air Navigation Services
FANS 1	Future Air Navigation Services, Version 1
FANS 1/A	Future Air Navigation Services, Version 1/A
FANS A	Future Air Navigation Services, Version A
FAR	Federal Aviation Regulation
FEC	Forward Error Correction
FFP1	Free Flight Phase 1
FIB	Forwarding Information Base
FIR	Flight Information Region
FIS-B	Flight Information Service – Broadcast
FL	Flight Level
FMS	Flight Management System

FTS2000	Federal Telecommunications System 2000
GA	General Aviation
GAIMS	General Aviation Information Management System
GB	Giga Byte
GES	Ground Earth Station
GHz	Giga Hertz
GMSK	Gaussian Mean Shift Key
GNSS	Global Navigation Satellite System
GOMEX	Gulf of Mexico
GOMP	Gulf of Mexico Program
GPS	Global Positioning System
HF	High Frequency
HFDL	High Frequency Data Link
HSAC	Helicopter Safety Advisory Conference
HPA	High Power Amplifier
HT	Heavy Twin Helicopter
Hz	Hertz
ICAO	International Civil Aviation Organization
ICM	Interline Communications Manual
IEEE	Institute of Electrical and Electronics Engineers
IEC	International Electrotechnical Commission
IFF	Identification, Friend or Foe
IFR	Instrument Flight Rules
IMC	Instrument Meteorological Conditions
IPT	Integrated Product Team
ISA	Industry Standard Architecture
ISE	In Service Evaluation
ISH	Intermediate Systems Hello
ISO	International Organization for Standardization
LAAS	Local Area Augmentation System
LAN	Local Area Network
LCD	Liquid Crystal Display
LDPU	Link Display Processing Unit
LDRCL	Low Density Radio Communications Link
LGA	Low Gain Antenna
LINCS	Leased Interfacility NAS Communications System
LNA	Low Noise Amplifier
LT	Light Twin Helicopter
M-ADS	Modified Automatic Dependent Surveillance
MASPS	Minimum Aviation System Performance Standards
MB	Mega Byte
MCU	Modular Concept Unit (approximately 1/8-ATR (Airline Transport Rack))
MHz	Mega Hertz
MIT	Massachusetts Institute of Technology
Mode S	Mode Select
MOPS	Minimum Operational Performance Standards

msl	Mean Sea Level
MT	Medium Twin Helicopter
NAAN	North Atlantic ADS-B Network
NADIN	National Airspace Data Interchange Network
NAS	National Airspace System
NASA	National Aeronautics and Space Administration
NCAA	Norwegian Civil Aviation Authority
NEAN	North European ADS-B Network
NEAP	North European CNS/ATM Applications Project
nm	Nautical Mile
NMEA	National Marine Electronics Association
NORAD	North American Air Defense Command
NOTAM	Notice To Airmen
NTSB	National Transportation Safety Board
NUP	NEAN Update Program
OS	Operating System
OSI	Open System Interconnection
OWG	Oceanic Working Group
PAMRI	Peripheral Adapter Module Replacement Item
PC	Personal Computer
PCI	Peripheral Component Interconnect
PCMCIA	Personal Computer Memory Card International Association
PDU	Packet Data Unit
PFAST	Passive Final Approach Spacing Tool
PIREP	Pilot Report
PLP	Packet Layer Protocol
PPS	Pulses Per Second
RaADS	RADAR and ADS-A Display System
RCL	Radio Communications Link
RF	Radio Frequency
RFI	Request for Information
RMS	Root Mean Square
RRADS	Research in Rotorcraft Automatic Dependent Surveillance
RSSI	Receiver Signal Sensitivity Indicator
RTCA	RTCA, Incorporated (Requirements and Technical Concepts for Aviation)
SAE	Society of Automotive Engineers
SAIC	Science Applications International Corporation
SARPs	Standards and Recommended Practices
Satcom	Satellite Communication
SC	Special Committee
SCSI	Small Computer System Interface
SDU	Satellite Data Unit
SE	Single Engine Helicopter
SVGA	Super Video Graphics Array
SICAS	Secondary Surveillance Radar Improvements and Collision Avoidance Systems
SMA	Surface Movement Advisor

SNDCF	Subnetwork Dependent Convergence Function
SSR	Secondary Surveillance Radar
STC	Supplemental Type Certificates
STDMA	Self Organizing Time Division Multiple Access
TAC	Traffic Advisory Center
TCAD	Traffic and Conflict Alert Device
TCAS	Traffic Alert and Collision Avoidance System
TCAS II	Traffic Alert and Collision Avoidance System, Version II
TCP/IP	Transmission Control Protocol/ Internet Protocol
TDMA	Time Division Multiple Access
TIS-B	Traffic Information Service – Broadcast
TM&O	Telecommunications Management and Operation
TMA	Traffic Management Advisor
TP-4	Transport Protocol – Level 4
TSO	Technical Standard Order
TWDL	Two Way Data Link
UAT	Universal Access Transceiver
UHF	Ultra High Frequency
URET	User Request Evaluation Tool
UTC	Universal Time Coordinated
VDC	Volts Direct Current
VDL	VHF Digital Link
VFR	Visual Flight Rules
VGA	Video Graphics Array
VHF	Very High Frequency
VMC	Visual Meteorological Conditions
VME	Versa Module Europa
VOR	Very High Frequency Omni-Directional Range
WAAS	Wide Area Augmentation System
XGA	Extended Graphics Array

Appendix B

Bibliography

1. "Automated Dependent Surveillance Broadcast (ADS-B)", AlliedSignal Corp., undated, 3pp, //falcon.cc.ukans.edu/-bohanam/ADS-B.html.

2. "A Visionary Look at Aviation Surveillance Systems", Donohue, G., FAA, IEEE Aerospace and Electronics Systems Magazine, October, 1995, pp8-14.

3. "GPS Squitter Experimental Results", Boisvert, R.E., et al, Lincoln Lab, MIT, 13th Digital Avionics Systems Conference, 1996, Proceedings, November 1994, pp521-527.

4. "GPS-Squitter Low-altitude Air Surveillance in the Gulf of Mexico", Boisvert, R.E., et al, Lincoln Lab, MIT, 14th Digital Avionics Systems Conference, 1995, Proceedings, November 1995, pp39-44.

5. "ADS-B/CDTI Capabilities for Near-term Deployment: Some Early Results", Mundra, A., et al, Mitre Corp., 16th Digital Avionics Systems Conference, 1997, Proceedings, November 1997, pp3.1-28-3.1-35.

6. "A Minimum Rate of Position Reporting in the Future Oceanic Air Traffic Control System", Flax, Bennett, FAA Technical Center, Position Location and Navigation Symposium, 1992, Record, March 1992, pp223-230.

7. "Opportunities for Integrating the Aircraft FMS, Aeronautical Operational Control Centers, and Future Air Traffic Management Systems in the Oceanic Airspace", Miller, Clyde, et al, FAA, AGARD, Machine Intelligence in Air Traffic Management, October 1993, 10pp.

8. Upgrading the U.S. Air Traffic Control System, IEEE United States Activities Board Position Statement, March 1995, 2pp. //www.ieeeusa.org/usab/DOCUMENTS/FORUM/LIBRARY/POSITIONS/airtraf.html.

9. TSO-C145, Airborne Navigation Sensors Using the Global Positioning System (GPS) Augmented by the Wide Area Augmentation System (WAAS), FAA, May 15, 1998, TSO-C145.

10. Overview of the NAS Architecture, Volume 2.0, FAA, October 1996 7pp.

11. Minimum Aviation System Performance Standards for Automatic Dependent Surveillance Broadcast (ADS-B), RTCA SC-186, February 19, 1998, DO-242, Printed document.

12. Guidance for Initial Implementation of Cockpit Display of Traffic Information, RTCA SC-186, February 19, 1998, DO-243, Printed document.

13. Proposed VDL Design Guidelines for the Enhanced Mode Supporting Integrated Voice and Data, Working Group D, Aeronautical Mobile Communications Panel, ICAO, 11-22 September 1995, AMCP/WG-D/4 WP-26, 20pp.

14. Strategic Plan for Oceanic Airspace Enhancements and Separation Reductions (Final), U.S. Department of Transportation, Federal Aviation Administration, January 1998, 49 pp.

15. Application of Satellite Navigation Capability for Civil Aviation, Peterson, D., AND-730, DOT, FAA, NAS Program Initiative no. 0050, 5 pp.

16. Oceanic Work Group Sub-group Charter, Holtsclaw, J. (ATA), Jengo, M. (FAA Oakland ARTCC), February 13, 1998, 2 pp. //www.faa.gov/ats/ato/owgsg.html.

17. Aquisition Strategy Paper for Air Traffic Control Beacon Interrogator Replacement Program, AND-400, FAA, undated, 40 pp.

18. GPS Transition Plan, FAA, undated, 34 pp.

19. Telecommunications Systems Summaries, ATS, FAA, undated, 9 pp. //www.faa.gov/ats/af/tipt/fics21/telesum.htm.

20. Order 1830.6A Telecommunications Asset Management, AAF, FAA, undated, 7 pp. www.faa.gov/international/atsinfo/18306a.htm.

21. Moving from Architecture Version 2.0 to Version 3.0, FAA, undated, 10 pp. www.nasi.hq.faa.gov/nasiHTML/nas-architecture/v2_5/3Move2_5/.html.

22. Section 2.0, System Description (Future Digital VHF A/G Communications System), FAA, undated, 24 pp.

23. "Safe Flight 21 Project", Kirkman, D., MITRE Corp., Letter to Editor, IEEE Aerospace and Electronic Systems Magazine, January 1999, p18.

24. Gulf of Mexico Communications, Navigation, Surveillance, Automation Operational Concept (GOMEX/GOMP Projects), FAA Houston ARTCC, January 30, 1998 (Coordination Draft 2.3).

25. Automatic Dependent Surveillance Broadcast (ADS-B) Mission Need Statement #326, FAA-ATO-401, October 5, 1998.

26. "Airworthiness Flight Release for Research Aircraft", Memo No. 70-62 (draft), Army, Moffett Federal Airfield, November 24, 1997.

27. (Draft) Automatic Dependent Surveillance Broadcast (ADS-B) Mission Needs Statement, Jan 1998, (more complete and formal version of Item 25. provided on the UPS Aviation Technologies web site).

28. FAA/CAA ADS-B Certification Kickoff, Cargo Airline Association, UPS Aviation Technologies, (meeting minutes) January 8, 1998.

29. Guidance for Use of Traffic Information Service (TIS), FAA-AC-90-TIS (draft), FAA-AFS-400, January 30, 1998.

30. 1090 MOPS subgroup minutes February 3-5, 1998, as recorded by UPS Aviation Technologies (RTCA/SC-186/WG-2 meeting).

31. Proposed ME-Field Format Definitions for ADS-B Extended Squitter Messages, RTCA/SC-186/WG-2 (1090 MHz MOPS Working Group) 17-19 March, 1998 (R. Boisvert, Lincoln Labs).

32. Cargo Airline Association Automatic Dependent Surveillance Broadcast (ADS-B) Program Plan, Version 3.0, Cargo Airline Assoc., November 19, 1998.

33. Cargo Airline Association ADS-B Operational Evaluation, Non-CAA Participation, Request for Information (RFI), (letter to non-CAA participants)

34. UPS Aviation Technologies ADS-B CDTI User Interface Specification, Document PD1178, 6/4/98, UPS Aviation Technologies.

35. ADS-B Interconnect Used in Phase 1 Hardware Installation, UPS Aviation Technologies, 6/3/98, block diagram, interconnect diagram and module specifications.

36. Michael S. Nolan, Fundamentals of Air Traffic Control. Belmont, California: Wadsworth Publishing Company, 1990.

37. Federal Aviation Administration. Air Traffic Rules and Procedures Services. Air Traffic Control. FAA Order 7110.65J, July 20, 1995.

38. ARINC Incorporated, Automatic Dependent Surveillance (ADS), ARINC Characteristic 745-2, June 30, 1993.

39. International Air Transport Association, FANS Manual Overview and Benefits, 1st Edition, Version 2.0, Montreal-Geneva, June 1996.

40. International Civil Aviation Organization, Manual of Air Traffic Services Data Link Applications, First Edition, Doc 9694-AN/955, 1999.

41. RTCA SC-170, Minimum Operational Performance Standards for airborne Automatic Dependent Surveillance (ADS) Equipment, Document No. RTCA/DO-212, October 26, 1992.

42. James H. Williams, "Description of the FAA Avionics Certification Process." Federal Aviation Administration, April 23, 1997.

43. Federal Aviation Administration AIR-100, "Guidelines for Design Approval of Aircraft Data Communications Systems." Advisory Circular No. 20-DC, Draft 1.7.

44. Data Link Operational Requirements Team, "Operational Requirements for the Aeronautical Data Link System," 3 January 1995.

45. Boisvert, S. R. Bussolari, G. H. Knittel, M. R. Owen, K. W. Saunders, "GPS-Squitter Low-Altitude Air Surveillance in the Gulf of Mexico;" Federal Aviation Administration. 0-7803-3050-1/95 1995 IEEE.

DISCUSSION OF DOCUMENTS IN THE ADS BIBLIOGRAPHY

The following commentaries are presented in a logical order that may not duplicate the original numeric order. Documents of greater relevance are discussed in more detail than are others.

(3) "GPS-Squitter Experimental Results (1994)" and (4) "GPS-Squitter Low-Altitude Air Surveillance in the Gulf of Mexico (1995)"
These documents report operational results under flight test conditions of the GPS-Squitter concept, under which GPS ADS-B position data is downlinked on a modified air traffic control radar beacon system (ATCRBS) Mode-S squitter transmission. This was achieved by modifying the standard 1 Hz, 56-bit spontaneous squitter message by adding a 56-bit ADS message field which contains alt, time, lat and lon information, transmitted at a 2 Hz rate.

The first report presents terminal area flight test results at Hanscom Field which, in summary, are as follows: a reliable update at least once every three seconds was achieved out to a 50-mile radius; coverage beyond 50 miles out to the radio horizon continued to be good, although not quite that reliable. Standard ATCRBS coverage is achieved at a five second update rate. Surface testing was also conducted at Hanscom, employing two receiving antennas in a configuration designed to eliminate most occluded areas. Using the combined antennas, a once-per-second reception reliability was achieved in 99.6 percent of the locations tested. Further ground tests at Logan International Airport using four receiving antennas achieved similar results: a once-per-second reliability of 99.6 percent over the entire aircraft movement area. Tests limited to the gate areas achieved 85.9 percent reliability.

The second report describes the results of testing the GPS-Squitter concept in the Gulf operational environment. Receivers were installed on two oil platforms (with data link to the mainland) and at the PHI heliport in Morgan City, La. Three aircraft (two Bell 206's and one Cessna 421) were equipped with GPS squitter transmitters, and live traffic displays were available at Morgan City, New Orleans and Houston. The tests demonstrated that continuous coverage of helicopters at 300 ft (over water) could be provided with ground stations spaced 50 nm apart. The fixed wing tests, conducted between 7500 and 20000 ft, demonstrated continuous coverage up to 100 nm.

(1) "Automated Dependent Surveillance Broadcast (ADS-B) (undated)
This paper briefly outlines the ADS-B concept and the equipment and avionics product enhancements currently offered by a vendor (AlliedSignal) in that regard, as well as anticipated future developments.

(2) "A Visionary Look at Aviation Surveillance Systems (1995)"
This paper, written by the then Associate Administrator for Research and Acquisitions, FAA, provides insight into FAA policy development. It outlines the importance of GPS, of ADS usage in oceanic environments, of ADS-B usage in the domestic en route environment, of ADS-B with secondary radar backup in the terminal environment, and of ADS-B with primary radar backup in the airport surface environment. Also discussed are CDTI usage and TCAS usage. Alternative strategies for implementing and transitioning to these systems are discussed.

(5) "ADS-B/CDTI Capabilities for Near-term Deployment: Some Early Results (1997)"
This paper examines current ADS-B and CDTI concepts by themselves and in conjunction with TCAS II capability in achieving enhanced capabilities: enhancement of visual approaches, and enhancement of oceanic operations. Simulation experiments involving CDTI during approach procedures are described. Effects on safety and capacity are discussed. Evaluations of potential CDTI features are conducted with the intention of supporting the RTCA CDTI MOPS development effort (see bibliography entry 12). This work is referenced by UPS Aviation Technologies in their writings, and is apparently a fundamental input to the RTCA committee proceedings.

(6) "A Minimum Rate of Position Reporting in the Future Air Traffic Control System (1992)"
This paper presents a theoretical development of the minimum reporting interval in the oceanic environment. The logic presented could form the basis of similar investigations relating to the domestic en route and terminal environments.

(7) Opportunities for Integrating the Aircraft FMS, Aeronautical Operational Control Centers, and Future Air Traffic Management Systems in Oceanic Airspace (1993)
(This report is not in our possession, this review is based on the Abstract.) This report addresses the benefits and problems of the integration of these functions in the oceanic environment from the viewpoint of the FAA authors. It appears to be preliminary and theoretical in tone.

(8) "Upgrading the U.S. Air Traffic Control System (1995)"
This is the official (and brief) policy statement of the Institute of Electrical and Electronics Engineers regarding ATC modernization.

(9) TSO-C145, Airborne Navigation Sensors Using the Global Positioning System (GPS) Augmented by the Wide Area Augmentation System (WAAS) (1998)
This is the official FAA TSO regarding airborne avionics for use with WAAS. It incorporates by reference RTCA/DO-229A, "Minimum Operational Performance Standards for Global Positioning System/Wide Area Augmentation System Equipment".

(10) "Overview of the NAS Architecture - Volume 2.0 dated October 1996"
This FAA document (apparently part of a larger document) outlines in detail the commissioning/decommissioning strategy for planned features of the NAS architecture (including target dates). It spans a period of at least 20 years.

(11) Minimum Aviation System Performance Standards for Automatic Dependent Surveillance Broadcast (ADS-B) (1998)
This is the RTCA MOPS on this subject.

(12) Guidance for Initial Implementation of Cockpit Display of Traffic Information (1998)
This is an RTCA advisory document. Subsequent revisions will probably culminate in a MOPS.

(13) "Proposed VDL Design Guidelines for the Enhanced Mode Supporting Integrated Voice and Data (1995)"

This paper is an input provided to an ICAO conference on VHF Digital Link (VDL) outlining an approach to the transition from the Mode 2 capability to the Mode 3 level of capability. Details regarding system architecture, capabilities and services are presented.

(14) Strategic Plan for Oceanic Airspace Enhancements and Separation Reductions (1998)
This official FAA plan (41 pages) describes in detail the objectives, strategies, capabilities and benefits to be realized in the move toward the future oceanic environment. To the best ability consistent with a 'strategic' type document, the planned oceanic separation reductions, technologies, benefits and implementation strategies are discussed in detail.

(15) National Airspace System Program Initiative: Application of Satellite Navigation Capability for Civil Aviation (1997)
This internal FAA program initiative document (recommending program modifications to the SATNAV program) describes the need to provide a central facility to monitor and predict end-to-end satellite navigation system performance, and to provide this information to users.

(16) Oceanic Work Group (OWG) Sub-Group Charter (1998)
This is the organizational charter of a sub-group of the OWG to handle procedure issues (there is no technical information provided). The OWG is a Pacific user/provider group chaired by the FAA, Oakland Center.

(17) Acquisition Strategy Paper for Air Traffic Control Beacon Interrogator Replacement (ATCBI-R) Program (undated)
This paper presents the detailed FAA plan for replacement of obsolete ATCBI-4 and ATCBI-5 equipment with ATCBI-6 equipment. The ATCBI-6 is a monopulse secondary surveillance radar with selective interrogation capability. It is upgradeable to include data link capability.

(18) GPS Transition Plan (undated)
This FAA document (29 pages) is a detailed plan for the transition to GPS including WAAS and LAAS, and including the decommissioning of existing navigation and landing systems (including dates).

(19) Telecommunications Systems Summaries (undated)
This FAA document outlines summaries of the following telecommunications systems: the Leased Interfacility NAS Communications System (LINCS); the FAA Telecommunications Satellites (FAATSAT); the Alaskan NAS Interfacility Communications System (ANICS); the Radio Communications Link (RCL); the Low Density Radio Communications Link (LDRCL); the Data Multiplexing Network (DMN); the Agency Data Transmission Network 2000 (ADTN-2000); the National Airspace Data Interchange Network (NADIN); and the Federal Telecommunications System (FTS2000).

(20) Order 1830.6A Telecommunications Asset Management (undated)
This FAA Order describes the nature and types of telecommunications assets used by the FAA (both leased and FAA-owned), and the responsibilities of the Telecommunications Management and Operations Division (TM&O). Each of the individual asset categories is listed in detail, as are the responsibilities of the various branches of the FAA organization.

(21) Section 3.0 Moving from Architecture Version 2.0 to Version 3.0 (undated)
This is Section 3. of a larger, unreferenced document. It describes funding and management plans associated with the transition to Version 3.0 of the NAS architecture. This is a management-type document, not a technical document; it goes into the efforts performed to assess the costs and strategies for making the transition, and discusses the fundamental features and improvements of the future architecture.

(22) Section 2.0 System Description (undated)
This is Section 2. of a larger, unreferenced document. It covers in considerable detail the features and functions of the current air/ground (A/G) communications system, and the inherent deficiencies of that system. The plans for the future digital A/G communications system are presented in detail.

(23) "Safe Flight 21 Project" (Jan 1999)
This brief letter introduces the motivations for redefining the Flight 2000 project as the Safe Flight 21 project.

(24) Gulf of Mexico Communications, Navigation, Surveillance, Automation Operational Concept (GOMEX/GOMP Projects) (Jan 30, 1998)
This is a coordination document for FAA and industry consensus regarding the operational concept for future Gulf ATC services. It covers communications, navigation, surveillance, data link, weather observation, and weather dissemination requirements. The operational areas are the Houston ARTCC Offshore Sector (overlying the offshore oil platform region) from zero to 7000 ft, and the Houston ARTCC Oceanic Sectors, extending from FL180 to FL600 within the Houston CTA/FIR. It documents the existing infrastructure and proposed solutions in each of the above areas. ADS-B is an integral part of the solutions proposed.

(25) Automatic Dependent Surveillance Broadcast (ADS-B) Mission Need Statement #326 (Oct 5, 1998)
This is the draft (version 2b) of the FAA mission need statement for ADS-B, initiated by ATO-401. This paper addresses the motivations for fostering ADS-B technology (safety, capacity, efficiency and business productivity), and covers capabilities needed in the air-to-air, air-to-ground and airport surface domains. Existing and planned surveillance capabilities are examined in detail. Shortcomings, and therefore technological opportunities and potential benefits, are presented in some detail.

(26) "Airworthiness Flight Release for Research Aircraft" (Nov 24, 1997)
This paper prescribes the policies, responsibilities and procedures for granting an airworthiness flight release for research flight testing by the U.S. Army Aeroflightdynamics Directorate (AFDD). It does not specifically address the two helicopters on loan to Ames that may be used for purposes of this project.

(27) Automatic Dependent Surveillance Broadcast (ADS-B) Mission Needs Statement (Jan 1998)

This statement, while dated earlier, appears to be a more complete and formal version of #25. It includes the concept of free flight as a motivating factor, and presents the case for ADS-B in more detail. Included are appendices on current operational demonstration initiatives, descriptions of critical, early-implementation ADS-B applications taken from the MASPS for ADS-B, potential near-term benefit areas, and an Arthur D. Little analysis of potential impact on near and actual midair collisions.

(28) FAA/CAA ADS-B Certification Kickoff (Jan 8, 1998)
This report is a formal record of the minutes of a meeting conducted by UPS Aviation Technologies at the FAA Seattle Certification Office with various FAA and industry persons attending. Represented organizations included FAA, express shipping companies, MITRE and Honeywell. An ADS-B/CDTI certification proposal was presented by UPS Aviation Technologies, and the perspective of the Cargo Airline Association was presented. The issues attending certification of an ADS-B/CDTI system were introduced and discussed round-table style at length. An AFS-400 representative presented the FAA perspective.

(29) Guidance for Use of Traffic Information Service (TIS) (Jan 30, 1998)

This draft Advisory Circular (AC 90-TIS) is intended to provide guidance to pilots in the use of TIS, which is a Mode S based presentation of ground-tracked traffic information in the cockpit. The anticipated benefits and limitations of TIS are presented in detail.

(30) 1090 MOPS Subgroup Minutes Feb 3-5, 1998
This report is a record of the minutes of a working group meeting dealing with issues related to the use of the 1090 MHz Mode S link for ADS-B communication. This memo concludes with a detailed action item list.

(31) Proposed ME-Field Format Definitions for ADS-B Extended Squitter Messages (March 1998)
This is a table of proposed squitter message formats presented to the SC-186 working group (the 1090 MHz subgroup). It covers airborne as well as ground traffic message formats.

(32) Cargo Airline Association Automatic Dependent Surveillance Broadcast (ADS-B) Program Plan (Nov 19, 1998)
This paper is Version 3.0 of the official CAA plan to implement ADS-B. It covers the motivations, the form of the proposed solution, the proposed schedule and description of planned activities. It covers the participants involved and their anticipated contributions to the program.

(33) Cargo Airline Association ADS-B Operational Evaluation, Non-CAA Participation, Request for Information (RFI) (undated)
This letter is an invitation to non-CAA parties interested in participating in the ADS-B operational evaluation. In it they solicit specific details regarding the current status and plans within these organizations in order to help coordinate activities to their mutual benefit.

(34) ADS-B CDTI User Interface Specification (Jun 4, 1998)

This UPS Aviation Technologies proprietary document is a detailed functional description of the UPS Aviation Technologies CDTI control/display unit. Copious details regarding the functions and use of the device are included.

(35) ADS-B Interconnect Used in Phase 1 Hardware Installation (Jun 3, 1998)
This brief UPS Aviation Technologies document presents the functional block diagram for the complete ADS-B/CDTI installation, specifications of the individual modules, and a complete interconnection drawing.

Appendix C

GPS Receiver Outputs (TSO C129B Receivers)

Output format Identifying Character(s) + Data

Bendix-King Model KLN 90 - RS 232 Output Port Data Record

AN 44 0168	GPS Latitude-North/South + Latitude (Degrees + Minutes*100)
BW 092 3197	GPS Longitude-East/West + Longitude (Degrees + Minutes*100)
C112	GPS-derived Track (Magnetic) (112 degrees)
D073	GPS-derived Ground Speed (73 knots)
E00019	Distance to Waypoint*10 (1.9 NM to MAP2)
GL0004	Cross Track Deviation*100 (0.04 NM Left of Desired Track)
I0999	Desired Track*10 (Magnetic) (99.9 Degrees)
KMAP2	Active Waypoint (MAP2)
L1011	Bearing to Active Waypoint*10 (Magnetic) (101.1 Degrees)
QE030	Magnetic Variation*10 (3.0 Degrees East)
T---------	This record always contains dashes
l000186	Distance to destination*10 (18.6 NM)
u	Self-test data
w	Flight plan data (15 bytes) [Byte 1 –active waypoint flag + last waypoint flag + waypoint number; bytes 2-6 ASCII characters of the five-character identifier; bytes 7-9, waypoint latitude; bytes 10-13, waypoint longitude; bytes 14-15, magnetic variation of the waypoint]

If receiver determines that a data item is invalid, the alpha designator is transmitted followed by blank characters to fill the data field.

Garmin 100 - RS 232 Output Port Data Record

z01861	GPS-derived Altitude (1861 feet)
AN294401	GPS Latitude-North/South + Latitude (Degrees + Minutes*100)
BW0910691	GPS Longitude-East/West + Longitude (Degrees + Minutes*100)
C177	GPS-derived Track (Magnetic) (177 degrees)
D072	GPS-derived Ground Speed (72 knots)
E00018	Distance to Waypoint*10 (1.8 NM to MAP2)
GR0002	Cross Track Deviation*100 (0.02 NM Right of Desired Track)
I1609	Desired Track*10 (Magnetic) (160.9 Degrees)
KKMAP1	Destination Waypoint (MAP1)
L1601	Bearing to Destination Waypoint*10(Magnetic)(160.1 Degrees)
QE021	Magnetic Variation*10 (2.1 Degrees East)
S	Flag Indicator (N = navigator is flagged)
T	End of Navigation Record Indicator
w	Flight plan data (same as Bendix King KLN 90 format)

Trimble TNL 2100T and TNL 3100T – RS 232 Output Port Data Record

```
AN 43 0847          Latitude (N or S + Degrees + Minutes*100)
BW 089 2816         Longitude (E or W + Degrees + Minutes*100)
C030                Magnetic Track (30 degrees)
D076                Ground Speed (76 knots)
E000029             Distance to Waypoint*100 (0.29 NM)
F0000               Estimated Time En Route (00 Hours + 00 Minutes)
GR0001              Cross Track Error*100 (00.01 NM Right of Course)
HR0010              Track Angle Error*10 (1 degree Right of Course)
I0319               Desired Track*10 (Magnetic) (31.9 degrees)
J02                 Leg Number
KWAUNA              Destination Waypoint (WAUNA)
L0309               Bearing to Waypoint*10 (30.9 degrees)
M 0000              Parallel Offset*10 (0.0 NM)
P---                Estimated Position Error*10 (No output)
QE030               Magnetic Variation*10 (3.0 degrees East)
c000                Time since last solution*10 (0.0 seconds)
T---A-------        Flags and Warnings (meaning of A TBD)
d034                Minimum Safe Altitude/100 (3,400 feet)
e034                Minimum En Route Safe Altitude/100 (3,400 feet)
i092994             Date (09/29/94)
j18:54:45           Time (18:54:45 UTC)
s065535             Software Code (65535)
w01 --- 9Y          Waypoint 1 ([none], 9Y TBD)
w02MIDLEY2          Waypoint 2 (MIDLE, Y2 TBD)
w03WAUNAGY          Waypoint 3 (WAUNA, GY TBD)
w04ENDOT8YF         Waypoint 4 (ENDOT, 8YF TBD)
w05MAP3 aY          Waypoint 5 (MAP3, aY TBD)
w06FHAWKScY         Waypoint 6 (FHAWK, ScY TBD)
tUJIFQH             Waypoint Type (UJIFQH TBD)
kN 43  8.47275 W 089 28.15705 076.0  Latitude, Longitude, Ground Speed
l------- ------- -------             GPS Altitude
m 29.71  31.92 R 0.00516 R  1.03     Magnetic Track, Desired Track,
                                      Cross Track Error, Track Angle Error
n---- ---- ---- ----                 No Vertical Navigation
o   0.28815  30.898 00:00:13         Distance, Bearing, Time to Waypoint
p18:54:45.05 -8.0                    GPS Time, Offset from GMT to Local Time
qR000.00000                          No Parallel Offset
r18:54:45.084                        Extended Time
```

Garmin 100 - NMEA Standard 183 Data Records

```
$GPRMB,A,0.26,L,NEELY,MAP2 ,3503.31,N,08517.11,W,0.5,063.5,6.6,V*3C
$GPBOD,208.2,T,211.2,M,MAP2 ,NEELY*5A
$GPWPL,3505.61,N,08515.61,W,NEELY*08
$GPRMC,012458,A,3503.117,N,08517.621,W,64.0,293.0,200794,003.0,W*41
$GPGGA,012458,3503.117,N,08517.621,W,1,08,1.4,397.8,M,31.2,M,,*5E
$GPGSA,A,3,01,06,09,12,17,21,23,28,,,,,2.2,1.4,1.7*32
$GPGSV,2,1,08,01,16,231,43,06,07,187,33,09,43,110,43,12,25,112,35*75
$GPGSV,2,2,08,17,77,139,44,21,30,294,45,23,61,337,45,28,19,304,42*71
$PGRME,22.8,M,28.9,M,36.8,M*18
```

Definitions of Data Elements

```
$GPRMB,A,0.26,L,NEELY,MAP2 ,3503.31,N,08517.11,W,0.5,063.5,6.6,V*3C
RMB – Recommended Minimum Navigation Information (a-Data Status –
      V=warning, b-Cross Track Error – 0.26 NM, c-Direction to Steer,
      d-Origin Waypoint – NEELY, e-Destination Waypoint – MAP2,
      f-Destination Waypoint Latitude (35 degrees, 3.31 minutes North),
      g-Destination Waypoint Longitude (85 degrees, 17.11 minutes West),
      h-Range to Destination – 0.5 NM, i-true bearing to destination –
      63.5 degrees, j-Destination Closing Velocity – 6.6 knots, k-Indicator
      for Arrival Circle Entered or Perpendicular Passed – V (TBD),
      l-Checksum – 3C)

$GPBOD,208.2,T,211.2,M,MAP2 ,NEELY*5A
BOD – Bearing – Origin to Destination (a-Bearing – 208.2 degrees True,
      b-Bearing – 211.2 degrees Magnetic, c-Destination Waypoint – MAP2,
      d-Origin Waypoint – NEELY, e-Checksum – 5A)

$GPWPL,3505.61,N,08515.61,W,NEELY*08
WPL – Waypoint Location (a-Waypoint Latitude – 35 degrees 5.61 minutes North,
      b-Waypoint Longitude – 85 degrees 15.61 minutes West,
      c-Waypoint Name – NEELY, d-Checksum – 08)

$GPRMC,012458,A,3503.117,N,08517.621,W,64.0,293.0,200794,003.0,W*41
RMC – Recommended Minimum Specific GPS Data (a-Time of Fix – 01:24:58 UTC,
      b-Receiver Status (V=Receiver Warning), c-Latitude - 35 degrees
      3.117 minutes North, d-Longitude – 85 degrees 17.621 minutes West,
      e-Ground Speed – 64.0 knots, f-Track – 293.0 degrees True,
      g-date - 07/20/94, h-Magnetic Variation – 3.0 degrees West,
      i-Checksum – 41)
$GPGGA,012458,3503.117,N,08517.621,W,1,08,1.4,397.8,M,31.2,M,,*5E
GGA – GPS Fix Data (a-Time of Fix – 01:24:58 UTC, b-Latitude of Fix –
      35 degrees 3.117 minutes North, c-Longitude of Fix – 85 degrees
      17.621 minutes West, d-GPS Quality Indicator (1=GPS Standard
      Positioning Service, 2= Differential GPS) – 1, e-Number of Satellites
      Used for Fix – 8 satellites, f-Horizontal Dilution of Precision – 1.4,
      g-Antenna Height Above Sea Level – 397.8 meters, h-Antenna Height Units
      (M=Meters) – M, i-Geoidal Height – 31.2 meters, j-Geoidal Height Units
      (M=Meters) – M, k-Checksum – 5E)
```

```
$GPGSA,A,3,01,06,09,12,17,21,23,28,,,,,2.2,1.4,1.7*32
GSA – GPS Dilution of Precision and Active Satellites (a-Navigation Mode
      (A=Automatic Switching between 2D and 3D Solution) – A, b-Mode Number –
      (1=fix not available, 2=2D, 3=3D) – 3 indicating 3D, c-Satellite
      Numbers Used in Solution – 01, 06, 09, 12, 17, 21, 23, 28, d-Position
      Dilution of Precision – 2.2, e-Horizontal Dilution of Precision – 1.4,
      f-Vertical Dilution of Precision – 1.7, g-Checksum – 32)

$GPGSV,2,1,08,01,16,231,43,06,07,187,33,09,43,110,43,12,25,112,35*75
GSV – Satellites in View (a-Total number of records – 2, b-This record – 1,
      c-Total number of satellites in view – 8, d-Satellite PRN number – 01,
      e-Elevation – 16 degrees, f-Azimuth - 231 degrees, g-Signal to
      Noise Ratio 43 db, Repeat d-g 3 times, h-checksum - 75)

$GPGSV,2,2,08,17,77,139,44,21,30,294,45,23,61,337,45,28,19,304,42*71
GSV – Satellites in View (a-Total number of records – 2, b-This record – 2,
      c-Total number of satellites in view – 8, d-Satellite PRN number – 17,
      e-Elevation – 77 degrees, f-Azimuth - 139 degrees, g-Signal to
      Noise Ratio 44 db, Repeat d-g 3 times, h-checksum – 71)

$PGRME – Garmin proprietary accuracy record
```

APPENDIX D

M-ADS TECHNICAL DESCRIPTION

D.1 M-ADS Functional Description

Additional insights into the M-ADS system may be gained by having more detail on the functional operation of the system; more information is provided here for that purpose. ADS-A reports are generated in response to commands, called contracts, issued by the ground ATC system. There are three types of reports (that can be sent to one or more requesting ATC centers). The reports are identified based on the type of information and the conditions under which the reports are top be sent.

- Periodic contract: information is sent repetitively at a specified rate.

- Event contract: information is sent at the occurrence of a specified event (or sequence of events), such as an altitude change. This causes a report to be sent independently of any periodic contract that may be in effect.

- Demand contract: information is sent one time, in response to a single request for specific information. One report is sent each time that a request is received from the ground.

A ground ATC facility may issue multiple simultaneous contracts to a single aircraft (may include one periodic and one event contract) which may be additionally supplemented by any number of demand contracts. Up to four separate ATC ground facilities may initiate ADS-A contracts simultaneously with a single aircraft.

D.2 M-ADS Reports

Each ADS-A report is comprised of one or more data groups as indicated in Table 4-1 below. The table provides a high level summary of the data groups supported by M-ADS, their content, and the group lengths in octets. *[Note: An octet is a data unit composed of eight ordered binary bits.]* The Basic ADS-A Group is required to be included in every report. The table also shows optional data groups that may be included.

Table D-1 ADS-A Message Groups

Group	Data	Length (octets)
Basic ADS Group	Latitude Longitude Barometric Altitude Time-stamp Figure of Merit (The figure of merit gives a measure of the aircraft navigation performance and hence the accuracy of the reported position).	11
Flight Identification Group	Flight Identifier	7
Earth Reference Group	True Track Ground Speed Vertical Rate	6
Air Reference Group	True Heading Mach Speed Vertical Rate	6
Airframe Identification Group	24-bit ICAO Identifier	4
Meteorological Group	Wind Speed True Wind Direction Temperature	5
Predicted Route Group	Latitude at next way point Longitude at next way point Altitude at next way point Expected Time of Arrival at next way point Latitude at (next+1) way point Longitude at (next+1) way point Altitude at (next+1) way point	18
Secondary Surveillance Radar Group	12-bit Secondary Surveillance Radar (SSR) code	3

It should be noted that the ADS-A reports are transmitted automatically by the M-ADS system without pilot intervention. However, the pilot does have the capability to initiate an emergency mode, causing M-ADS to send ADS-A reports at some high update rate for ATC alerting and to assist in search and rescue operations.

The M-ADS system includes an additional, non-standard data group to support the SSR beacon code. This is being used in the North Sea operations to identify the helicopters, instead of the Flight Identification Group, and to meet the radar look alike requirements for the program.

Two other groups (Intermediate Projected Intent Group and Fixed Projected Intent Group) specified by RTCA MOPS (DO-212) are not included in the table because they are not supported by the M-ADS system.

D.3 Airborne Equipment

The NCAA M-ADS program, trials, and data described in the NCAA report were based on system installations in several helicopters over the course of the program (these included Sikorsky S-76C, S-61N, and Super Puma types). It should be noted that to support several sensor configurations (e.g., to account for the fact that a Sikorsky S-61N does not have the same sensors as a Super Puma Mk1), the ADS-A function reads a set of ADS-A Unit program pins. These program option pins uniquely define a particular sensor configuration and must be set correctly as part of the M-ADS installation into the helicopter.

Discussions below provide a summary description of the airborne installed M-ADS system.

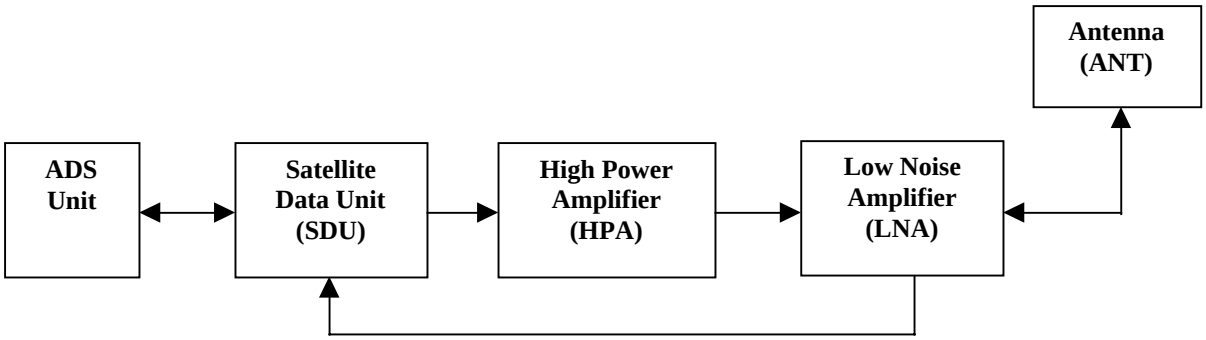

Figure D-1 M-ADS Airborne Equipment.

<u>ADS Unit</u>
The main function of the ADS Unit is to:

- Collect data from various sensors and equipment onboard the aircraft,
- Initiate a Context Management (RTCA/DO-223) log-on to the ADS-A ground system at the ATCGS,
- Receive and interpret ADS-A requests from the ADS-A processor system at the ATCGS,
- Compile and down link ADS-A messages as requested by the ADS-A processor system,
- Execute the ATN communication protocols for down linking of the ADS-A messages,
- Display system status to pilot, and
- Perform the communications management unit (CMU) role.

Table D-2 Key ADS-A Unit Parameters

Weight	2.7 kilograms
Size	ARINC 600 std. 2MCU
Power requirements	28 Volts DC Input, 0.3 Amperes
Cooling	No forced air cooling required
Mounting	Normal ARINC 600 tray, Size #2 ARINC 600 connector.

Satellite Data Unit (SDU) and High Power Amplifier (HPA)

The main function of the SDU is to:

- Provide an interface for a packet data communication link onboard the aircraft, following the Inmarsat Data-2 standard. This capability is currently not utilized by M-ADS,
- Provide an interface for a packet data communication link onboard the aircraft, in accordance with the X.25 standard (i.e., Data-3),
- Provide packet data communication at 600 and 1200 bps,
- Automatically manage:
  a. log-on to the various Inmarsat Aeronautical Service GESs
  b. manage hand over from one satellite to another, and
- Decode and generate L-Band (1.5/1.6 GHz) RF signals.

The main function of the HPA is to:

- Amplify the SDU's RF signals and transmit via the low gain antenna (LGA), and
- Perform transmission signal power control on command from the SDU and maintain the effective isotropic radiated power (EIRP) of the aircraft antenna within Inmarsat requirements.

Table D-3 Key Parameters for the SDU and HPA

	SDU	**HPA**
Weight	3.8kilograms	4.5kilograms
Size	ARINC 600 std. 2 MCU	ARINC 600 std. 2 MCU
Power requirements	28 Volts DC Input, 3.5 Amperes	28 Volts DC Input, 6.3 Amperes maximum
Cooling	Forced air cooling required	Forced air cooling required
Mounting	Normal ARINC 600 std. Tray, Size #2 ARINC 600 connector. AV Mounts used	Normal ARINC 600 std. Tray, Size #2 ARINC 600 connector. AV Mounts used

The HPA is a 40-Watt Class C amplifier.

Antenna (ANT) Subsystem
The antenna subsystem consists of the low noise amplifier (LNA)/diplexer and the LGA.

The main function of the LNA/diplexer is to:

a. Amplify received signals from the antenna,
b. Filter RF signals for protection of onboard GPS receivers, and
c. Provide diplexer function to protect SDU receiver when transmitting RF signals.

Table D-4 Key Parameters for the LNA/Diplexer

Weight	2.7 kilograms
Size	ARINC 741 standard compliant (Height 50, Length 281, Width 197 (millimeters)
Power Requirements	28 Volts DC Input (+18 V to +40 V), 0.15 Amperes max
Mounting	Hard-mounted with 6 bolts through the footprint plane to supporting structure in the tail boom.

The main function of the LGA is to transmit and receive RF signals in the following ranges:

Transmit: 1626.5 - 1660.5 MHz
Receive: 1530 - 1559 MHz

Right-hand circular polarization is used. Antenna gain is 0 dBi and fulfils the Inmarsat requirements with respect to antenna coverage.

Table D-5 Key Parameters for the Low Gain Antenna

Weight	.07 kilograms
Size	Height 116, Length 279, Width 108 (millimeters)
Drag	1.1l grams @ 35,000 feet @ Mach 0.85
Mounting	Hard mounted on top of the tail boom

D.4 Data Communications Protocols

The end-to-end data communications communication architecture is shown in Figure D.2.

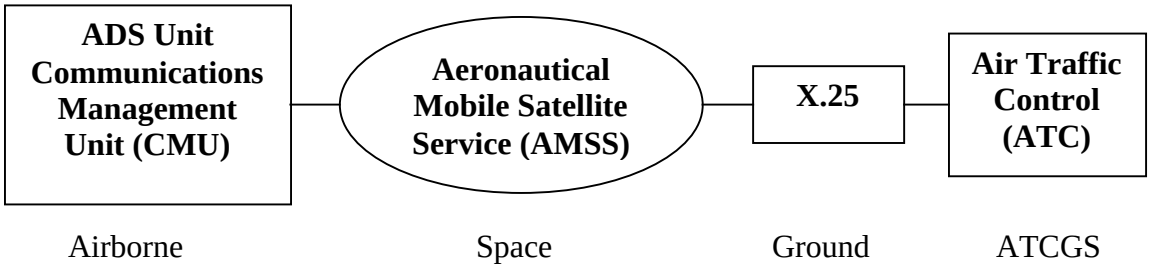

Figure D-2 AMSS Data Communications Model

The ATN as part of its definition specifies the OSI model and implementing protocols. The OSI model permits users to separate the needs of the Application Process (AP) (e.g., ADS-A function or the context management (CM) function (i.e., air-ground data link log-on function)) from the network used to route and relay the AP data. Network users may select those upper layer services and protocols that permit reliable end-to-end transfer of the AP data.

In M-ADS the ADS function and CM APs interface directly with the Transport Layer and the Session, Presentation, and Application layers are non-existent. See Figure D-3 below for a discussion of the OSI protocols as they relate to the M-ADS system implementation.

ADS Unit Data Communication Protocols

Figure D.3 shows the protocols of the ADS Unit data communications protocol stack.

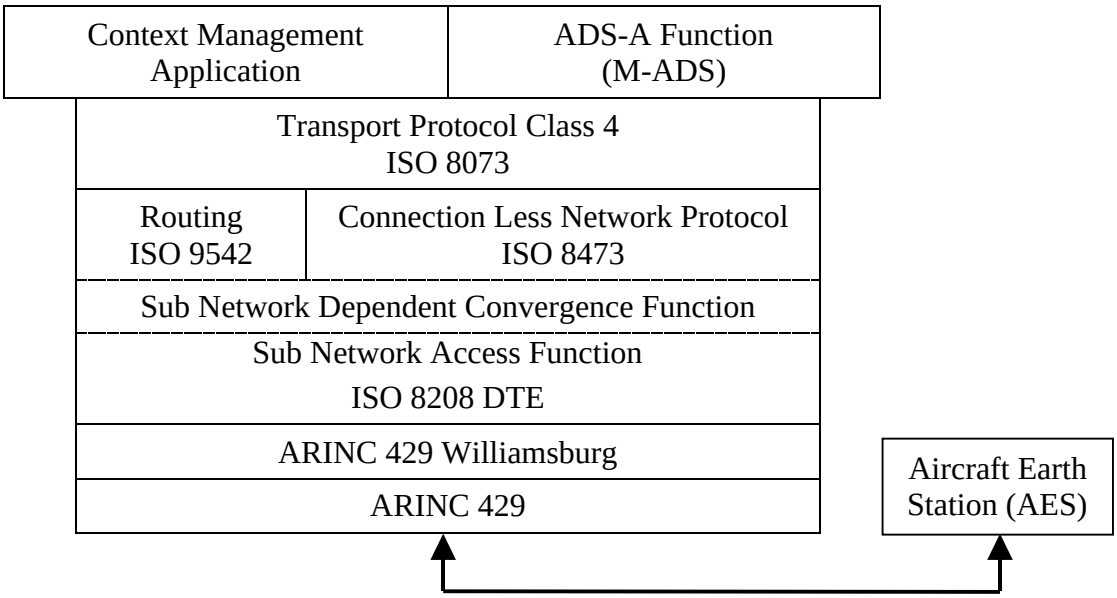

Figure D-3 M-ADS Communication Protocols (Airborne Segment)

The ground system of M-ADS has a similar communication protocol stack.

Physical layer A pair of low-speed ARINC 429 lines provide the bi-directional physical communication between the ADS Unit and the SDU.

Data Link Layer The ARINC 429 Williamsburg protocol uses the physical protocol and provides a service for transmitting Link Data Units between the ADS-A Unit and the SDU. The protocol contains functions for detection (CRC-16) and recovery of errors in the Link Data Units.

Network Layer ISO 8208 Packet Layer Protocol: this implements a X.25 Packet Layer Protocol (PLP) Data Terminal Equipment (DTE). It uses the Data-3 capabilities of the Aircraft Earth Station to interface to public or private X.25 data network on the ground.

Mobile SNDCF as specified in CNS/ATM-1 Standards and Recommended Practices (SARPS): provides convergence between the connection-less protocols (ISO 9542 and ISO 8473) and the connection oriented ISO 8208 PLP. In addition it implements the "Local Reference" compression method for compression of ISO 8473 packet header information. This function makes better use of the limited bandwidth of the Air-to-Ground satellite link.

ISO 9542 Intermediate System to Intermediate System Routing Information Exchange Protocol: the M-ADS system makes use of the ISO 9542 protocol to interchange routing information between the Airborne Boundary Intermediate System (BIS) and the Ground BIS as specified in the CNS/ATM-1 SARPS. Intermediate Systems Hello (ISH) PDUs are interchanged between the Airborne BIS and the Ground BIS each time the satellite subnetwork becomes available, and thereafter every 10 minutes. By means of the interchange, the ISO 9542 can build a Forwarding Information Base (FIB) containing information (primarily addresses) about the available routes to the ground.

The ISH period (currently 10 minutes) is chosen such that it shall not impose an unnecessarily high load on the limited bandwidth satellite subnetwork, but still allow the ground router to delete routes to non-existing airborne end-systems in a timely manner (currently 3*10 = 30 minutes).

ISO 8473 Connection-Less Network Protocol (CLNP): this protocol routes messages between different end-systems over a set of interconnected subnetworks.

Transport Layer

ISO 8073 Connection Oriented Transport Protocol Class 4: this protocol has the capability to detect and recover from errors which occur as a result of low grade service from the network layer. It allows several distinct connections to be set up between different end-systems.

The M-ADS system implementation uses a local reference algorithm to compress the CLNP header to reduce the size of messages transmitted across the satellite link, which is the bottleneck for communications throughput. End-to-end data integrity is accomplished by TP4 generating and including a 16-bit checksum as a parameter in the header of each message transmitted.

APPENDIX E
Seagull Technology, Incorporated

FIREFLIGHT II TECHNICAL DESCRIPTION

General Aviation Information Management System (GAIMS) Hardware Realization Overview
The idea of using an open-standards system that utilizes high-volume commercial computer technology, was successfully realized and tested by Seagull Technology. Two main goals drove Seagull's solution. The first was to create an open-standards architecture, one that both enabled and encouraged system component development. The second was to accommodate industry-proven, highly evolved computer technology. The result was the initial realization of a GAIMS platform, a modular and rugged system marketed as FireFlight II. It is an advanced version of the FireFlight system that has flown on California Department of Forestry (CDF) helicopters for over three years.

Figure E-1 The FireFlight II System

The photograph shows the rugged computer platform, a keyboard, and a display. The display shown above is a removed panel mounted 6.4" diagonal, VGA display. Due to the modularity of the hardware system, multiple display options are possible.

All components of the FireFlight II system are made from commercial-off-the-shelf (COTS) components that can be affordably obtained. FireFlight II provides tangible evidence of the present-day efficacy of rugged, COTS solutions.

While FireFlight II is Seagull Technology's initial instance of a GAIMS platform, it should be emphasized that the GAIMS software functionality can be realized on other platforms that have a

similar operating system, a GPS receiver, and a suitable radio modem. The software is not dependent upon the FireFlight II instance of hardware.

The GAIMS hardware system involves the integration of the following key elements:

1. Rugged, COTS computer platform
2. Color Display
3. TDMA Radio Modem
4. GPS receiver

The following sections provide an overview of these capabilities.

Computer Platform

The primary computer includes the central processing unit (CPU), chassis, display, and user interface devices (keyboard and touchscreen). The FireFlight II primary computer is an IBM-compatible personal computer (PC) running the Windows NT Operating System (OS). A PC-based system was selected for several reasons:

1. Wide Platform Use: Judging by the number of units sold, Windows NT/95 is by far the most popular personal computer OS. Platforms based upon an Intel processor and these OS's have had greater user exposure and refinement than any other comparable systems in the world. The high-volume results in prices that are affordable to general aviation pilots. This selection also assures maximum compatibility with pilots' home computers for data transfer and home training/simulation uses.
2. Several Rugged Architectures: A durable and tough computer is needed to meet the reliability requirements of flight conditions. Because of its widespread use, there are currently many rugged, portable versions of PC compatibles available for flight testing. In the future, these PCs can be adapted for permanent installation into aircraft.
3. Affordable Components and Software Tools: The large marketplace and promise for growth have resulted in a huge array of well-tested hardware solutions and software tools.

Due to the open architecture of the system, many PC configurations are possible. The GAIMS unit features a 5-slot passive backplane with both ISA and PCI slots. This allows for easy upgrade or expansion of computer components. The current hardware configuration is as follows:

Table E-1 Hardware Configuration for Current FireFlight II System

Processor	Intel Pentium, 233 MHz with 512 cache
RAM	128 MB (up to 256 MB possible)
Storage	9 GB SCSI hard drive (18 GB optional)
Floppy Drive	3.5" 1.44 MB
Operating System	Windows NT
I/O Ports	4 serial ports
Input Devices	Touchscreen; mouse, keyboard (optional)
Expandability	SCSI

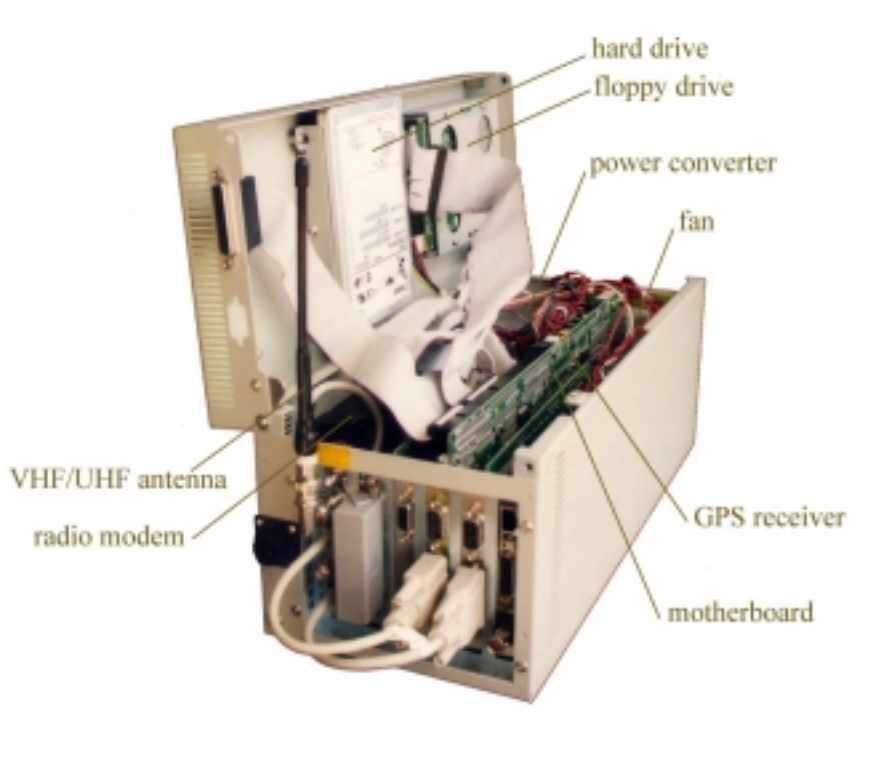

Figure E-2 An Open FireFlight II Computer Chassis

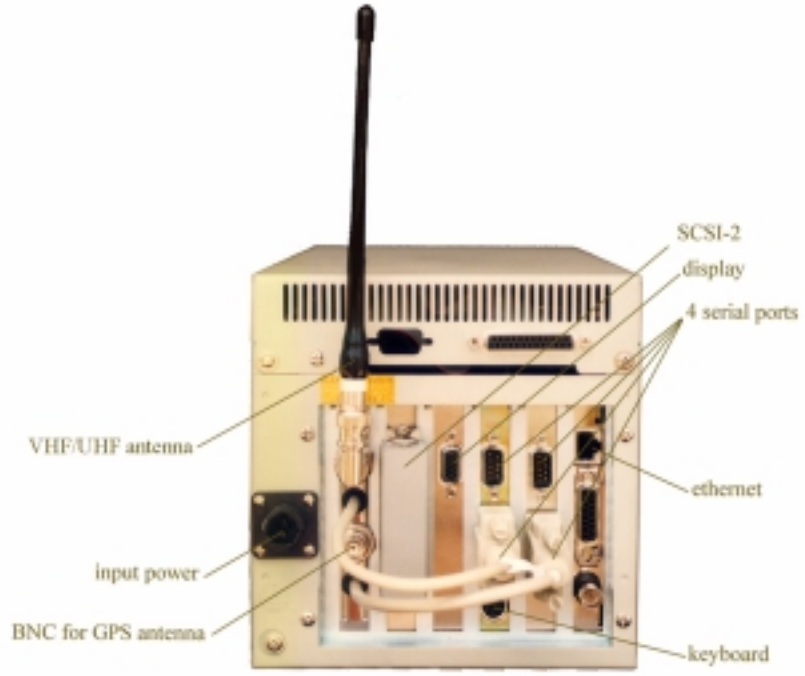

Figure E-3 The Back Side of the FireFlight II Computer Chassis

The computer, GPS receiver, and digital radio modem are housed in a heavy-duty steel chassis which measures 6.5” wide, 6.7” high, and 15.5” deep, approximately the size of a shoebox. The chassis features a hold-down clamp with rubber dampers that isolate the cards from vibration. Other components, such as DC-DC power converters, are mounted using hook and loop fasteners. These fasteners provide for excellent damping, isolating the components from high frequency vibrations. Also, hook and loop fasteners toughen with vibration. If an upgrade is necessary, components held in this manner can be easily removed and replaced.

The computer is actively cooled with a 49-CFM fan located on the front panel. The entire unit can be run from an air or ground vehicle’s power bus using either 12V or 28V DC. The only external connectors from the computer are to the antennas, aircraft power bus, keyboard (if desired), and display.

Display Hardware

The market for color, high-resolution, sunlight-readable, PC-compatible displays are rapidly evolving. Early in GAIMS product development, a higher-volume market for such displays was beginning to emerge. However, prices were high while availability was low. Several enabling display options have emerged in the intervening time. Market research conducted by Seagull indicates the need for panel-mounted, lapboard, and velcro-mounted display solutions. The first option is for more permanent installations while the latter two are better suited for more flexible usage. The modularity of the GAIMS hardware architecture allows it to be fully compatible with all of these needs. By simply changing the display driver card, the system has the ability to use multiple displays that are compatible with the PC industry standards (VGA, SVGA, and XGA). This allows for the realization of numerous display options.

On one of the test aircraft (Piper Dakota N4341M), a commercially available, high-end, 6.4 inch-diagonal, panel-mounted, sunlight-readable, full VGA display was successfully used for testing.

However, there was still a need for a high quality portable solution. This need was addressed through the development of a color, portable, flat-panel display. The display properties are as shown in table E-2.

Table E-2 Properties of the Rugged, Portable Display for the FireFlight II System

Type	Active-matrix, flat-panel, color liquid crystal display
Display Format	640 pixels (width) x 480 pixels (height)256 colors
Brightness	500 nit (candelas per square meter)
Screen Size	10.4-inch diagonal (8.4-inch width x 6.3-inch height)
Packaging	9.5-inch height x 15.75-inch width x 1.25-inch depth
Touchscreen	Resistive or guided acoustic wave technology
Operating Temp.	0° to 50° Celsius
Construction	Rugged sealed-face powder-coated aluminum housing
Weight	4.0 pounds

Figure E-4 The 6.4-inch (Diagonal) Panel-Mounted Display Used for the FireFlight II System during a Flight Test

This represents one of several display possibilities for the GAIMS system.

The display is equipped with a resistive touchscreen, allowing the pilot to select information with the simple touch of a finger. The display is attached to the main computer through a single flexible cable that can reach up to 25 feet. The glass used in the display is rated to perform to 50 degrees C without degradation. Above 50 degrees C, the display will still function, although some contrast will be sacrificed.

The thin display enclosure was designed specifically for the cockpit environment in order to maximize ease of use. Housed in a rugged, lightweight, aluminum enclosure, it fits comfortably on one's lap or can be mounted to the panel using hook and loop fasteners. The display enclosure features a handy clip to hold papers and maps, allowing the display to serve a useful secondary function as a clipboard. The enclosure also has an unobtrusive carrying handle that can be flattened out of the way when not in use. The handle allows for easier and more secure transport, while not sacrificing precious space. The display also has a custom-made anti-glare case made of a highly reflective material. This case provides some thermal protection for the unit during storage.

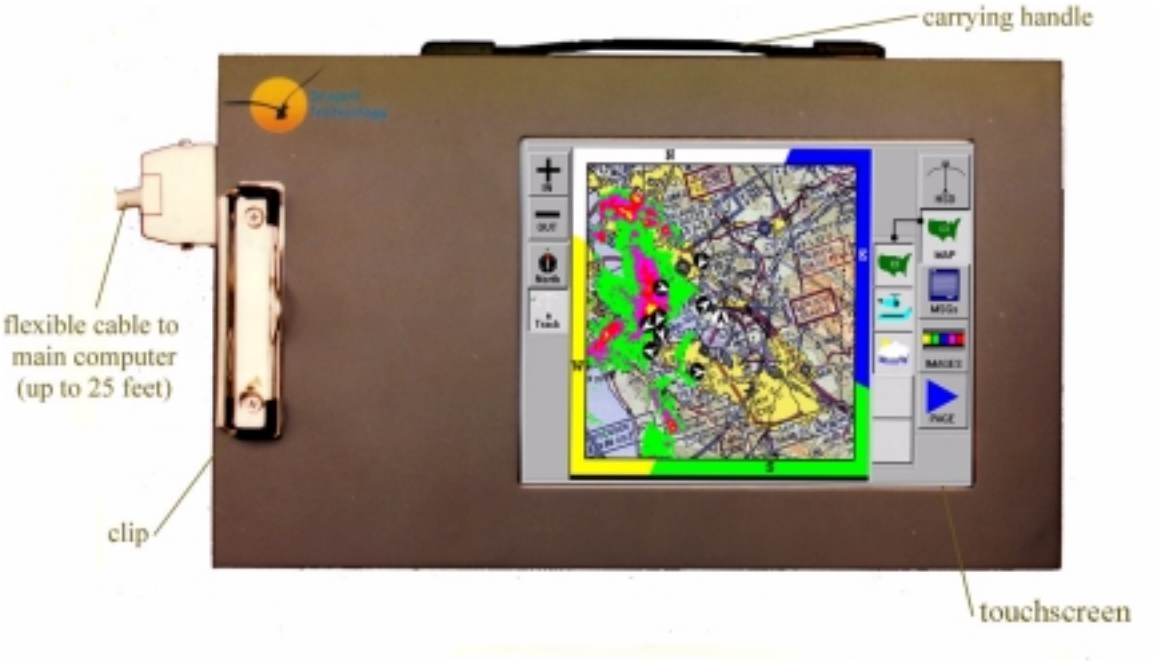

Figure E-5 Portable, Thin, Lightweight Display for the FireFlight II System

This represents another display possibility for the GAIMS system.

TDMA Radio Modem Hardware Overview

The FireFlight II system features a digital radio modem for 2-way air-air and air-ground communication. By latching on to the pulse-per-second (PPS) timing pulse available from a GPS receiver, the radio modem is able to maintain its digital communications precisely synchronized to UTC. This enables TDMA communications, an organized and effective means to have several different types of communications on a single channel/frequency. For example, command and control messages, graphics and/or text files for incident management, ATIS-like (Automatic Terminal Information Service) information, and hazard warnings are representative of the general types of information that can be digitally broadcast and presented to all participants in real time. Some of the characteristics of the digital radio modem transceiver are identified in table E.3.

The first block of a transmission has header bits that reduce the net data rate to 6240 bps without FEC, and 4160 with FEC. Subsequent transmissions have a net data rate of 8640 without FEC and 5760 with FEC. All blocks have validation bits.

GPS Receiver Hardware Overview

GAIMS software can run with nearly all commercially available GPS receivers. To realize a first-generation GAIMS platform, a full-featured, low-cost GPS receiver was selected and integrated into the FireFlight II system. The receiver is a carrier-aided unit that has the following:

1. a pulse-per-second (PPS) timing output
2. outputs carrier-phase data
3. accepts RTCM-104 differential GPS (DGPS) corrections.

Detailed characteristics of the integrated GPS receiver are presented in table E-4.

Table E-3 Properties of the Digital Radio Modem Transceiver for the FireFlight II System

Frequencies	UHF (400-470 MHz), VHF (100-152 MHz)
Data Rate	9600 bits per second (bps) or 4800 bps raw data rate
Protocol	TDMA with better than 100 microsecond time accuracy
UTC Synchronized	Synchronization to UTC maintained via GPS pulse per second (PPS) trigger
Interface	9-pin RS232 up to 38,400 bits per second full duplex; CRC or Checksum integrity checking
Broadcast Integrity	Forward Error Correction (FEC); Interleaved and Bit Scrambled
Output Power	2 Watts (1.2 quiescent; 10.2 Watts Transmit) 15 Watts (amplifier required; 1.6 quiescent; 50 Watts Transmit) 35 Watts (amplifier required; 1.6 quiescent; 100 Watts Transmit)
Receive Sensitivity	Software programmable Receiver Signal Sensitivity Indicator (RSSI); down to –112 dBm
Modulation	Gaussian Mean Shift Key (GMSK)
Size	4.3 inches x 3.7 inches x 5.2 inches
Operating Temp.	-30 ° to 60°Celsius
Vibration and Shock	IEC 68-2-55 Standard
Housing	Powder-coated aluminum

Table E-4 Properties of the GPS Receiver for the FireFlight II System

Type	Motorola VP Oncore-8
Architecture	L1 (1575.42 MHz) C/A code with carrier phase aided tracking
Additional Outputs	Pulse-Per-Second (synchronized to UTC); carrier phase Measurements
Differential GPS	Ready to accept RTCM-104 Standard via RS232 interface
Re-acquisition Time	2.5 seconds (typical)
Data Formats	NMEA-0183 and Motorola Binary
Tracking	Up to 8 simultaneously
Interface	9-pin RS232 up to 9600 baud full-duplex; Checksum for data integrity
Battery Backup	3 Volt lithium-ion battery for maintaining state data
Dynamics	0 – 1000 knots; up to 4 G; up to 60,000 ft altitude
Accuracy	15-meter RMS (standard) or 5-meter RMS (DGPS)
Update Rate	Once per second